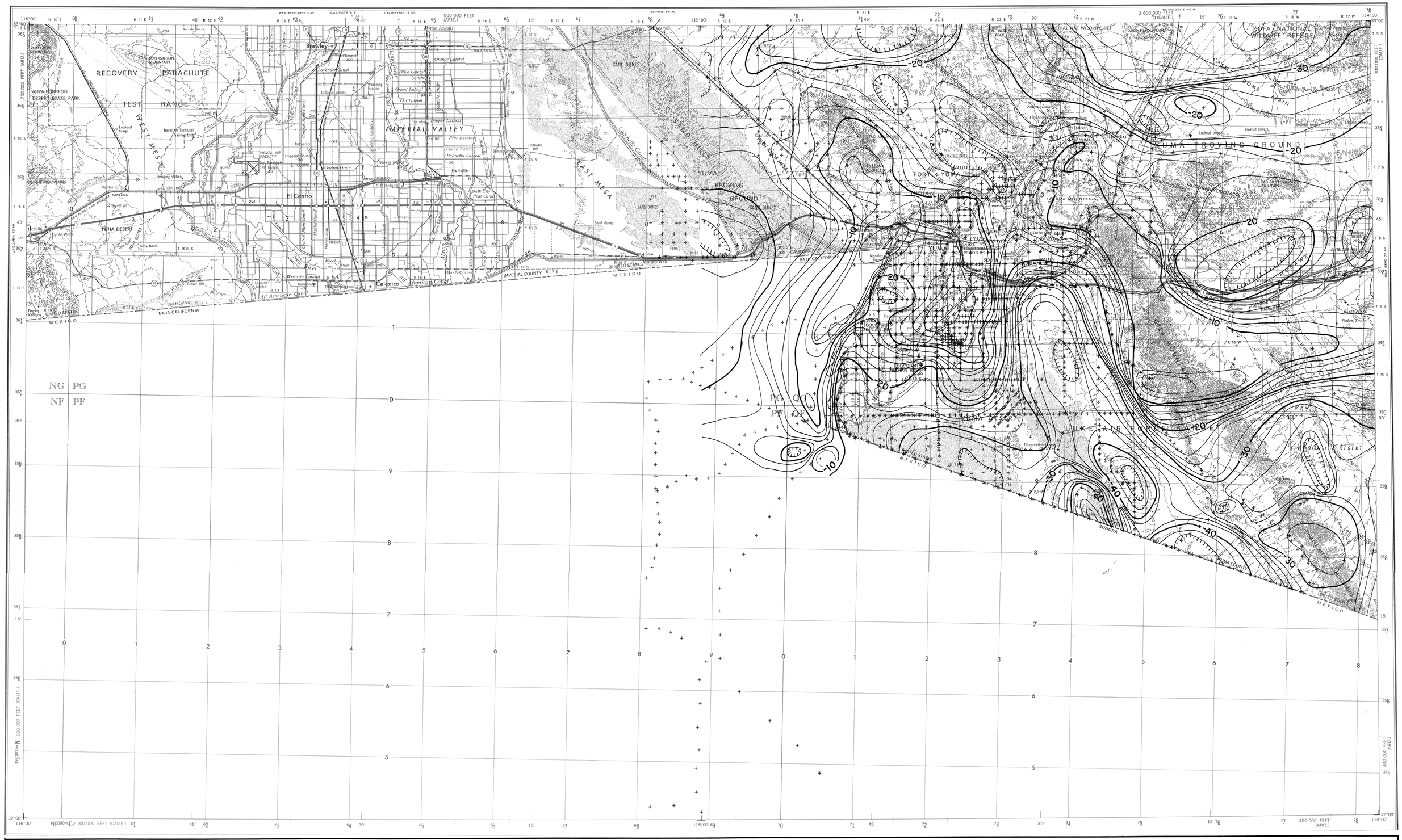

81-24
#4

THE COMPLETE RESIDUAL BOUGUER GRAVITY ANOMALY MAP

El Centro

BY

Joseph C. Lysonski, C. L. V. Aiken, and John S. Sumner

1981

A density of 2.67g/cm³ is used for the Bouguer correction and for terrain corrections calculated by computer for a radial zone of 2.6 to 167 km. around each station. A trend surface of elevations of Arizona (Inset 1a) was used to define a regional Bouguer anomaly (Inset 2a) and to compute residual anomaly values. For a complete discussion of data sources, availability, and data reduction programs see:

Aiken, C. L. V., 1976, Analysis of Gravity Anomalies in Arizona: Ph.D. dissertation, University of Arizona, Tucson; Ann Arbor, University Microfilms Order DBJ77-02313.

Lysonski, J. C., 1980, The ISGN 71 Residual Bouguer Gravity Anomaly Map of Arizona: M.S. thesis, University of Arizona, Tucson.

Aiken, C. L. V., Lysonski, J. C., Sumner, J. S., and Hahman, W. R., Sr., 1981, A Series of 1:250,000 Complete Residual Bouguer Gravity Anomaly Maps of Arizona: Arizona Geological Society Digest, v. 13, (in press).

Financial assistance for the production of this map was provided by the U.S. Department of Energy, Division of Geothermal Energy, under contract DE-FC07-79ID12009 through the State of Arizona, Bureau of Geology and Mineral Technology, Geological Survey Branch, Geothermal Group.

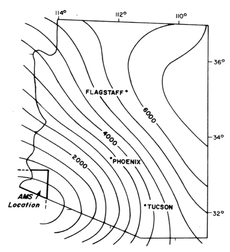

Inset 1a: Regional elevation (EL_R) of Arizona.

The complete residual Bouguer gravity anomaly map was computed by using a Bouguer correction of the following form:

$$g_{BC} = -2\pi G\,\rho\left[EL_S - EL_R\right] + CC + TC$$

where:

G = universal gravitational constant
ρ = 2.67 g/cm³
EL_S = station elevation
EL_R = regional elevation
CC = curvature correction using (EL_S − EL_R) as thickness of slab
TC = terrain correction

SCALE 1:250,000

5 0 5 10 15 20 STATUTE MILES

5 0 10 15 20 25 30 KILOMETERS

BASE PREPARED BY THE U.S. ARMY TOPOGRAPHIC COMMAND, WASHINGTON, D.C.
REVISED BY THE U.S. GEOLOGICAL SURVEY
CONTOUR INTERVAL 200 FEET
WITH SUPPLEMENTARY CONTOURS AT 100 FOOT INTERVALS
TRANSVERSE MERCATOR PROJECTION

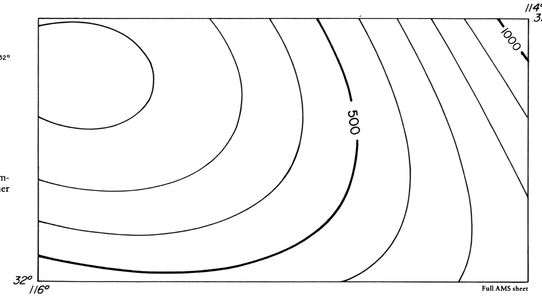

Inset 1b. Regional elevation of this AMS sheet. Contour interval is 100 ft. Scale 1:1,250,000.

NOTE: Because gravity-station density is sparse in some areas, control is limited in drawing gravity contours.

Information from this map may be quoted or reproduced without special permission, provided appropriate acknowledgement is given the source.

For sale by the Bureau of Geology and Mineral Technology
845 N. Park Ave., Tucson, Arizona 85719

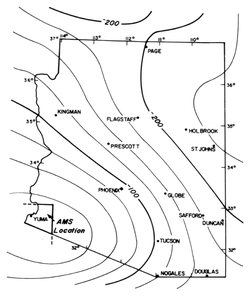

Inset 2a: Regional Bouguer anomaly (g_R) map of Arizona. Contour interval is 25 milligals.

This regional Bouguer anomaly map of Arizona was derived by multiplying the regional elevation (Inset 1a) by −0.0341 mgal/ft (the Bouguer correction for 2.67 g/cm³ density).

This inset shows the regional anomaly (g_R) removed from the Bouguer anomaly (g_B) by using the correction procedure shown below Inset 1a. The resulting residual values (g_{RR}) contoured on this AMS sheet can also be computed by subtracting this regional anomaly from the Bouguer anomalies.

$$g_{RR} = g_B - g_R$$

CONTOUR INTERVAL IS 2 MILLIGALS

+ REPRESENTS GRAVITY STATION LOCATION

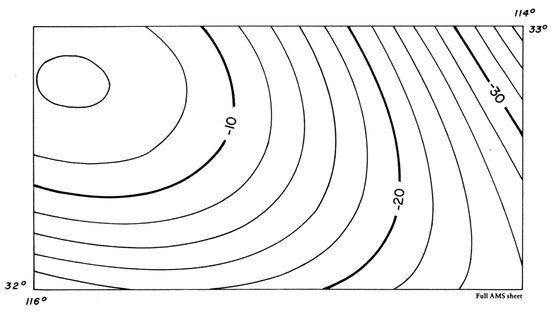

Inset 2b. Regional Bouguer anomaly map of this AMS sheet. Contour interval is 2 milligals. Scale 1:1,250,000.