Explanation to accompany geologic map of the Mormon Flat Dam quadrangle, Maricopa County, Arizona

by Charles A. Ferguson and Wyatt G. Gilbert
1997

Arizona Geological Survey
Open-File Report 97-14, sheet 2 of 3, with text

MAP UNITS

QUATERNARY

- **Qa** Younger alluvium
- **Qc** Colluvium, talus, and colluvium-covered slope deposits
- **Qls** Landslides and other mass-movement or avalanche deposits
- **Qac** Younger alluvium and colluvium undifferentiated
- **Qoa** Older alluvium undifferentiated
- **Ql_2** Younger lower Pleistocene alluvial terraces
- **Ql** Lower Pleistocene alluvial terraces
- **Qm** Middle Pleistocene alluvial terraces
- **Qo** Older Pleistocene alluvial terraces

MIOCENE

- **Tsy** Weakly indurated conglomerate, sandy conglomerate, and pebbly sandstone
- **Tby** Younger basalt
- **Ttx** Crystal-rich unwelded tuff
- **Tct** Volcaniclastic conglomerate and sandstone interbedded with unwelded tuff
- **Tcv** Volcaniclastic conglomerate, sandstone, silty mudstone, and sedimentary breccia
- **Trpy** Younger crystal-poor rhyolite lava
- **Tty** Younger crystal-poor bedded unwelded rhyolitic tuff
- **Tq** Crystal-rich quartz latite lava (plagioclase, sanidine, quartz, biotite, hornblende)
- **Tqb** Brecciated quartz latite lava
- **Trd** Quartz-phyric 5-10% phenocryst rhyodacite lava and lava breccia
- **Tcx** Volcanic and epiclastic breccia, conglomerate, and unwelded tuff
- **Ta** Apache Leap Tuff
- **Tax** Apache Leap Tuff heterolithic mesobreccia
- **Tw** Whitlow Canyon type rhyodacite lava (feldspar and quartz phenocrysts)
- **Twb** Monolithic breccia composed of Whitlow Canyon type rhyodacite lava
- **Twi** Intrusive plugs of Whitlow Canyon type rhyodacite lava
- **Tr-w** Mixed crystal-poor rhyolite and Whitlow Canyon type rhyodacite lava
- **Tr** Older rhyolite lava undifferentiated (aphyric to crystal-rich: plagioclase, sanidine, biotite, ± quartz)
- ***Tr-t** Older rhyolite lava and unwelded tuff undifferentiated
- **Tri** Intrusive rhyolite
- **Trb** Brecciated older rhyolite lava
- **Trpb** Brecciated older crystal-poor rhyolite lava
- **Trxb** Brecciated older crystal-rich rhyolite lava
- **Tra** Aphyric (<0.5% phenocrysts) older rhyolite lava
- **Trp** Crystal-poor (between 0.5 and 5% phenocryst) older rhyolite lava
- **Trx** Crystal-rich (between 5 and 10% phenocryst) older rhyolite lava
- **Trxx** Very crystal-rich (15-20%) felsic lava (plagioclase and biotite)
- **Tt** Crystal-poor, bedded, unwelded, rhyolitic tuff
- **Tbm** Middle basalt
- **Trda** Apache Gap type rhyodacite lava (crystal-rich, plagioclase, biotite, hornblende)
- **Tdp** Porphyritic dacite (moderately crystal-rich, quartz, plagioclase, biotite)
- **Td** Crystal-rich dacite lava (plagioclase, biotite)
- **Ttd** Dacitic crystal-rich unwelded tuff
- **Tdb** Dacite lava breccia
- **Tdh** Fine-grained, hornblende-rich dacite
- **Tb** Older basalt
- **Tbi** Basalt dikes and other hybabyssal bodies
- **Tbu** Basalt lava, age relative to other volcanics unknown
- **Tc** Arkosic conglomerate, pebbly sandstone, and sandstone (non-volcaniclastic)

EARLY OR MIDDLE PROTEROZOIC

- **YXg** Variably foliated K-feldspar porphyritic granite or quartz monzonite
- **Xv** Tectonically foliated quartz feldspar porphyroblastic schist (metafelsite)
- ***Xu** Proterozoic rocks undifferentiated
- ***** on cross-sections only

LOCATION OF IMPORTANT GEOGRAPHIC FEATURES

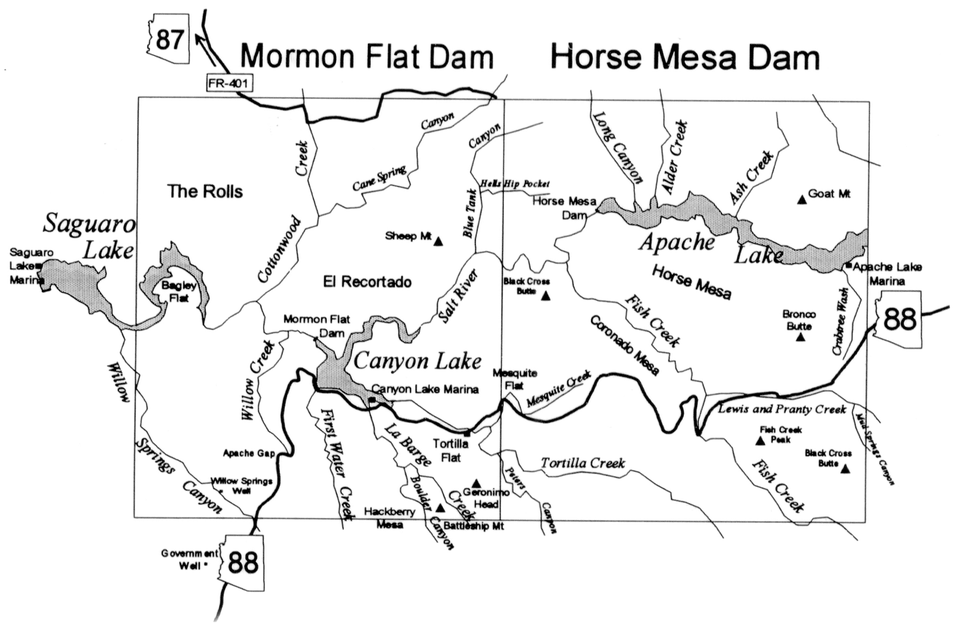

MAP SYMBOLS

Contacts, dashed where approximate, dotted where concealed by younger deposits

- depostional and intrusive
- normal fault, ball in hangingwall
- reverse fault, R in hangingwall

Dikes, vents

- rhyolite dikes
- basalt dikes
- location of vent

Strike and dip of planar features

- foliation in lavas and welded tuffs
- bedding in tuffs, sedimentary rocks and contacts between lava flows
- tectonic foliation in granitic rocks. Shear sense (n=normal, r=reverse) of C-S fabrics indicated if known
- dip of fault plane, spike indicates dip direction

Trend of linear features

- trend of striations on fault surface
- trend of flow-banding lineation in welded tuff and lava
- flow direction from foresets of flow-front autobreccias in felsic lava flows

Location of geochronology sample (dates in table)

End points for line of cross-section

F — F' line of type section

TABLE OF GEOCHRONOLOGY

FT=fission track, K/Ar=Potassium/Argon, Ar/Ar=Argon/Argon, WR=whole rock, plag=plagioclase, san=sanidine, biot=biotite *Dates added 12/31/97 **Dates added 9/8/98

	Date	Method	Sample	Source
1	18.53 ± 0.13 Ma*	Ar/Ar san	FZ-10	Ferguson and others, 199
2	18.53 ± 0.06 Ma*	Ar/Ar san	FZ-7	"
3	22.60 ± 0.90 Ma	K/Ar WR	UAKA-81-30	Scarborough, 1981
4	18.61 ± 0.24 Ma*	Ar/Ar san	FZ-13	Ferguson and others, 199
5	18.80 ± 0.11 Ma*	Ar/Ar san	FZ-12	"
6	17.87 ± 0.06 Ma*	Ar/Ar san	FZ-11	"
7	15.40 ± 0.80 Ma	FT zircon	AP234	
7	15.90 ± 0.80 Ma	FT sphene	AP234	"
8	14.23 ± 0.47 Ma	K/Ar WR	UAKA-80-129	Scarborough, 1981
9	18.92 ± 0.09 Ma*	Ar/Ar san	FZ-85	Ferguson and others, 199
10	16.50 ± 1.30 Ma	FT zircon	AP27A	Stuckless and Sheridan, 1971
11	18.91 ± 0.20 Ma*	Ar/Ar san	FZ-81	Ferguson and others, 199
12	15.43 ± 0.34 Ma	K/Ar plag	UAKA-80-128	Scarborough, 1981
13	18.71 ± 0.13 Ma*	Ar/Ar san	FZ-44	Ferguson and others, 199
14	18.47 ± 0.05 Ma*	Ar/Ar san	FZ-45	"
15	18.26 ± 3.10 Ma	K/Ar WR	PED-14-68	Damon, 1969
16	20.60 ± 0.62 Ma	K/Ar biot	UAKA-68-16	Shafiqullah and others, 1980
17	18.80 ± 0.11 Ma*	Ar/Ar san	FZ-32	Ferguson and others, 199
18	18.89 ± 0.13 Ma*	Ar/Ar san	FZ-49	"
19	18.35 ± 0.08 Ma*	Ar/Ar san	FZ-50	"
20	19.24 ± 0.42 Ma	K/Ar san	UAKA-80-126	Scarborough, 1981
21	18.75 ± 0.08 Ma	Ar/Ar san	FZ-149	Ferguson and others, 199
22	18.57 ± 0.08 Ma	Ar/Ar san	FZ-148	"
23	18.61 ± 0.07 Ma	Ar/Ar san	FZ-101	"
24	18.61 ± 0.07 Ma	Ar/Ar san	FZ-102	"

STRATIGRAPHIC CORRELATION DIAGRAM, MORMON FLAT DAM QUADRANGLE

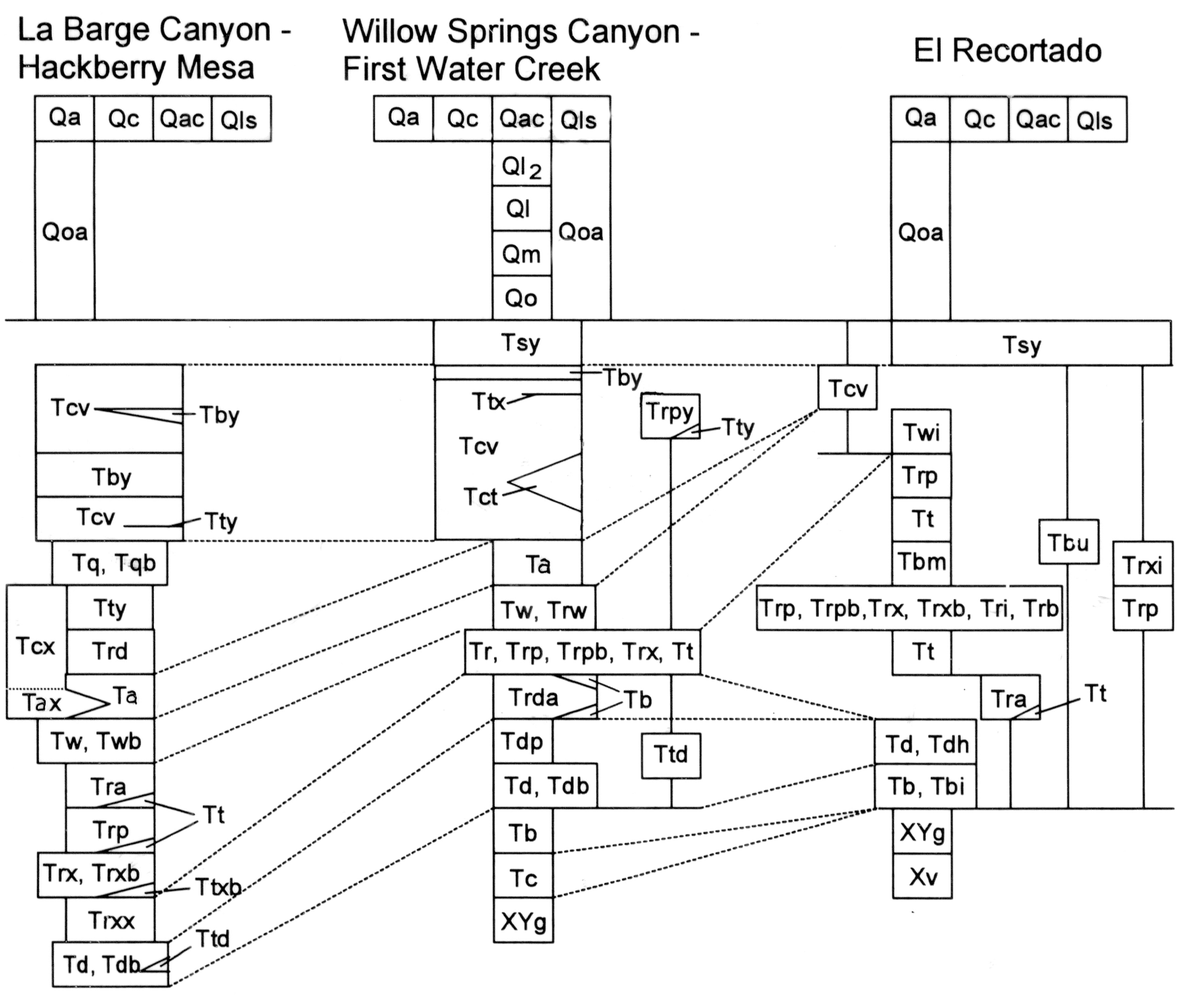

Jointly funded by the Arizona Geological Survey and the U.S. Geological Survey STATEMAP Program. Contract #1434-HQ-96-AG-01474