GEOLOGY OF THE FLORENCE JUNCTION AND SOUTHERN PORTION OF THE WEAVERS NEEDLE 7.5' QUADRANGLES PINAL COUNTY, ARIZONA

by
Charles A. Ferguson and Steven J. Skotnicki

Arizona Geological Survey
Open-File Report 95-10

September, 1995
(revised May 1996)

Arizona Geological Survey
416 W. Congress, Suite #100, Tucson, Arizona 85701

Includes 1:24,000 scale geologic map, cross-sections, 27 page text

Jointly funded by the Arizona Geological Survey
and the U.S. Geological Survey STATEMAP Program.
Contract #1434-94-A-1222

This report is preliminary and has not been edited
or reviewed for conformity with Arizona Geological Survey standards

INTRODUCTION

The study area is situated along the southern edge of the Superstition Mountains approximately 40 miles east of the greater Phoenix metropolitan area (Figure 1). Geology is dominated by mid-Tertiary volcanic rocks of the Superior volcanic field (Ransome, 1903), and these rocks depostionally overlie a crystalline basement of early Proterozoic Pinal Schist intruded by middle Proterozoic granitoids. In some areas a relatively thin sequence of the Middle Proterozoic Apache Group occurs along the contact between these two rock types.

The volcanic stratigraphy of the southern Superstition Mountains changes abruptly from a sequence dominated by lavas on the south, in the Whitlow Canyon Area, to a sequence dominated by the thick Superstition tuff to the north. The transition corresponds to the southern edge of a large volcano-tectonic depression referred to as the Superstition Cauldron (Sheridan and others, 1970; Sheridan, 1978). The Superstition Cauldron is bounded to the south by a broad valley underlain by Proterozoic basement. This valley is thought to represent the upturned, highly fractured, and therefore recessive, margin of the Cauldron. The valley serves as the main barrier to correlation of the Tertiary volcanic stratigraphy in the study area.

The most important structural feature of the study area is a major west-side-down normal fault that runs along the east edge of the map area. The fault, referred to as the Elephant Butte fault is probably continuous with the concealed and inferred, western range-bounding fault of the southeasterly adjacent Mineral Mountain Area. The Elephant Butte fault appears to have had a great influence on the Tertiary stratigraphy and volcanic structure of both physiographic regions.

PHYSIOGRAPHY

The study area encompasses the southern Superstition Mountains and a southern flanking foothills region which is known as the Whitlow Canyon Area (Trapp and Reynolds, 1995). These two physiographic areas (Figure 2) differ markedly in terms of stratigraphy and structure despite the fact that both are dominated by Mid-Tertiary volcanic rocks. The physiographic boundary between Superstition Mountains and the Whitlow Canyon Area is a prominent east-west trending valley the eastern end of which is known as Coffee Flat. Drainages flow across, rather than along, this valley, which is herein referred to Peralta-Coffee Flat valley (Figure 3). To the east of Coffee Flat, the physiographic distinction between the two areas is not clear. In both physiographic areas elevations range between a little over 4,000' to a little under 2,000', and the vegetation is a thick brushy version of Sonoran biozone. Principal drainages head in the Superstition Mountains and cross the Peralta-Coffee Flat valley before cutting through the Whitlow Canyon Area and flowing south to confluences with Queen Creek, the major drainage that transects the southern part of the study area.

METHODS OF INVESTIGATION

The study area, along with adjoining areas of the Goldfield and Superstition Mountains southeast quadrangles was mapped at a scale of 1:24,000 during the fall, winter, and spring of 1994-95 by the authors. Mapping was done without the benefit of aerial photographs, but some mapping of the steep south-facing Superstition Mountain front was done on photographs taken from the ground during the course of our field investigations.

ACKNOWLEDGMENTS

Production of this map and report was funded jointly by the Arizona Geological Survey and the United States Geological Survey STATEMAP program under the terms of contract 143494-A-1222. The views and conclusions contained in this document are those of the authors and should not be interpreted as necessarily representing the official policies, either expressed or implied,

of the U.S. Government. We thank Jon Spencer and Steve Richard of the Arizona Geological Survey and Don Peterson of the USGS for their advice, support, and encouragment. Jon Spencer reviewed the map and manuscript, and his suggestions were greatly appreciated. Peter Corrao drafted Figures 3-6. We would also like to thank Charles Backus and M. L. Herbert of the Quarter Circle U Ranch for allowing access to private lands adjcacent to the Superstition Wilderness. Robert Scherer graciously showed us around his mineral property in the Milk Ranch area.

STRATIGRAPHIC FRAMEWORK

EARLY AND MIDDLE PROTEROZOIC ROCKS

Pinal Schist

The oldest rocks exposed in the study area are polydeformed phyllites, schists, and locally gneisses, mostly metasedimentary, of the Pinal Schist. Most of these rocks consist of gray-colored pelites, with locally thick sequences of psammites (not mapped separately), and thinner sequences of calc-schists (locally with impure marbles), and fine-grained greenstones or amphibolites. The calc-schists and amphibolites were mapped separately in the Whitlow Ranch Flood Control Basin area. Discontinuous, thin, dark-colored quartzites are also present, but are very rare, and were mapped separately only in the Milk Ranch area. Some amphibolite-rich sequences contain light-colored sericite-rich schists that may be felsic metavolcanic units. The phyllites and schists invariably contain numerous generations (pre- to post-kinematic) of quartz veins, and in some areas, these veins consitute up to 20% of the rocks. The metamorphic grade, or more accurately, the textural grade of the Pinal Schist increases from south to north. This is based purely on the field observation that textures change from phyllite and fine-grained schist in the south to coarse-grained schists and compositionally banded gneisses to the north.

Metapelitic rocks in the south, near Queen Creek, are phyllites or fine-grained schists containing small (<2-3mm), dark-colored, prismatic, porphyroblasts (possibly magnetite or tourmaline), and large (up to 4cm), rectangular, post-kinematic, greenish-gray, felted porphyroblasts. The larger porphyroblasts, which make up as much as 10% of the some of the schists are tentatively identified as either cordierite or andalusite (or both). Towards the north, in the vicinity of Milk Ranch Creek, the Pinal Schist changes abruptly across a strike-parallel transition zone less than 100 meters wide into a compositionally banded quartzofeldspathic, biotite-rich gneiss. Also in this area, rusty, dark red colored, rectangular porphyroblasts up to 5 cm were rarely noted, but their composition is unknown.

Many of the local variations in the metamorphic mineral assemblage of Pinal Schist are likely controlled by compostional variations of its sedimentary precurssor. However, the overall change from phyllites and fine-grained schists in the south to coarse-grained schists and paragniess to the north suggest that regional metamorphic P-T conditions were greater to the north. The role of contact metamorphism due to the emplacement of younger plutonic rocks can not be excluded as a possible cause of the higher textural grades to the north. However, regional trends in metamorphic grade suggest that metamorphism of the Pinal Schist ocurred due to tectonic burial of these rocks during early Proterozoic orogeny. The implication is that sometime prior to deposition of the middle Proterozoic Apache Group, the study area was tilted to the south, thereby exposing deeper crustal levels to the north. The Pinal Schist is at its highest observed textural grade at the northeast and northwest corners of the map area where it is a banded paragneiss.

Plutonic rocks

Two main varieties of plutonic rock intrude the Pinal Schist in the map area; felsic and mafic. A medium-grained, K-feldspar porphyritic granitoid is most abundant and it may correlate with the middle Proterozoic Ruin Granite (Stuckless and Naeser, 1972; Silver and others, 1980). Another complex stock of medium-grained diorite and monzodiorite occurs in the northeast corner of the map area, and it may be related genetically to the Madera Diorite (e.g. Livingstone, 1969). Three other types of felsic granitioid were recognized; an equigranular, mafic mineral-rich quartz monzonite at Dromedary Peak, an equigranular granite at the southeast corner of Comet Peak, and a leucocratic granite dike that intrudes Pinal Schsit in the Milk Ranch area. Although locally foliated, none of these plutonic bodies show evidence of deformation beyond what might be expected to have ocurred during their emplacement.

Along the northern edge of the study area, small bodies of strongly foliated granite, granitic gneiss, and foliated amphibolite are intruded by the K-feldspar porphyritic granite. The foliation in these bodies is probably tectono-metamorphic in origin and these rocks may be associated with the Early Proterozoic Pinal Schist.

MIDDLE PROTEROZOIC

Apache Group

A thin sequence of the Middle Proterozoic supracrustal rocks intruded by diabase dikes and sills (Apache Group) occurs between the Early to Middle Proterozoic metamorphic-plutonic basement and the Mid-Tertiary volcanic rocks of the map area. Fairly continuous sequences of the Apache Group are exposed in the northeast, northwest, and southeast corners of the map area. In these areas the sequence is divided into three principal units. These are, in ascending order: 1) Pioneer Formation (Yp) which consists of dark red and brown-colored, laminated argillites and siltstones; 2) Dripping Springs Quartzite (Yq) consisting of medium-bedded, cross-stratified, pink quartz arenites, feldspathic arenites and arkoses; 3) Mescal Limestone (Ym) consisting of gray and light purple-colored laminated carbonate which is locally stromatolitic. Three other relatively thin units are also locally present: 1) rhyolite (Yr) occurs as both small intrusive plugs or sills, or as a thin sequence of bedded tuff that occurs near the base of the Pioneer Formation; 2) Barnes conglomerate (Yc) which consists of thin and discontinuous quartz pebble conglomerate lenses near the base of the Dripping Springs Quartzite, and 3) basalt (Yb) which overlies Mescal Formation in the northeast corner of the study area. The basalt is believed to be part of the Apache Group, and not a basal Tertiary flow, because it is overlain by a pre-volcanic conglomerate of probable Tertiary age. The Scanlon Conglomerate (Ys), which is considered the base of the Apache Group was recognized as a very thin (<2m) layer at only one locality in the study area, just east of Quarter Circle U Ranch.

MID-TERTIARY

Mid-Tertiary rocks of the study area consist almost entirely of volcanic rocks of the Superior volcanic field (Ransome, 1903; Peterson, 1968). The volcanic stratigraphy changes abruptly across the prominent east-west trending Peralta-Coffee Flat valley that divides the area into two physiographic regions. The Whitlow Canyon Area is dominated by lavas, and the Superstition Mountains are dominated by crystal-rich welded tuff. The Whitlow Canyon Area lavas are interleaved with numerous unwelded tuffs that are probably related to the lavas, but there is a thin and discontinuous crystal-rich, welded tuff near the base of the sequence (tuff of Quarter Circle U Ranch) which may correlate with part of the welded tuff sequence of the Superstition Mountains or the older Apache Leap Tuff of the Superior area to the east. Lavas of similar composition to those of the Whitlow Canyon Area are found along the southern margin of the Superstition Mountains underlying, intruding, or interleaved with the welded tuff sequence of the Superstition Mountains.

Stratigraphic correlation diagrams for Tertiary units of the Whitlow Canyon Area and the Superstition Mountains are illustrated in Figures 2, 5 and 6.

Whitlow Canyon Area

The volcanic stratigraphy of the Whitlow Canyon Area can be divided into three sequences: lower dacite-andesite lavas, middle felsic lavas, and an upper sequence. These sequences corresond to some degree with the tripartite (dacite-andesite, rhyolite, basalt) sequence recognized by Ransome (1903) for the Superior volcanic field. As a whole the sequence is tilted gently to the south, and its base is exposed continuously along the southern edge of the Peralta-Coffee Flat valley. The basal contact with Proterozoic rocks is either a disconformity with crystalline basement or an angular uncomformity with the Apache Group.

Lower dacite-andesite sequence

The oldest sequence of volcanics in the Whitlow Canyon Area is a complex sequence of mafic and intermediate lavas. It consists of a moderately crystal-rich dacite lava, crystal-poor to aphyric andesite lavas, and a distinctive crystal-rich, biotite, hornblende rhyodacite lava which occurs near the base of the sequence, but only in the northwest part of the study area. All of these flows are interleaved with a variety of basalt and basaltic andesite lavas, and the base of the sequence is a basalt flow in most areas. The tuff of Quarter Cirlcle Ranch, a crystal-rich, rhyodacite tuff that may correlate with the Apache Leap Tuff occurs near the base of the sequence in the northwestern corner of the study area.

The lateral continuity of many of the lower sequence's lava flows is not great, but enough continuity exists so that with detailed mapping important structures can be defined. One of the lavas (the dacite of San Mateo Castro Ranch) is petrographically distinctive and very widespread, occuring from the western edge all the way to the extreme northeast corner of the study area.

Middle felsic lavas sequence

The base of the middle package of felsic lavas consists of rhyolite lava flows (rhyolite of Tule Canyon) interleaved with bedded tuff units. Numerous feeder dikes and plugs for these rhyolite lavas are present in the Quarter Circle U Ranch area, and they connect with a swarm of dikes intruding Proterozoic basement rocks that extends northward to the southern edge of the Superstition Mountains. In the Whitlow Canyon area, rhyolite lavas are everywhere overlain by a biotite-bearing rhyodacite lava characterized by large embayed quartz phenocrysts. This lava, called the rhyodacite of Whitlow Canyon is overlain by a light-colored dacite lava (dacite of Buzzards Roost), which is in turn overlain by rhyodacite lavas of Coffee Flat Mountain. The dacite of Buzzards Roost is distinctive because, although it is light-colored and apparently a high-silica volcanic rock, it is nearly void of quartz phenocrysts.

The youngest felsic lava units of the Whitlow Canyon Area are a couple of domes and associated flows that intrude older units directly west of the confluence of Whitlow and Randolf canyons. The younger of these two domes is petrographically identical to a widespread lava that caps Coffee Flat Mountain in the Supersition Mountains, and although these flows are not physically continuous they are tenatively correlated.

The ages of the rhyodacites of Coffee Flat Mountain are important for two reasons. First, the younger one apparently occurs in both the Superstition Mountains and the Whitlow Canyon area, and it may therefore provide a stratigraphic link between the areas. Second, the older lava of Coffee Flat Mountain intrudes or overlaps the study area's two most prominent structural features: the southern margin of the Superstition Cauldron, and the Elephant Butte fault which is the major west-side down normal fault of the region.

Upper sequence

The upper sequence is present only in the southern portion of the Whitlow Canyon Area. It is dominated by the tuff of Comet Peak, a densely welded, crystal-rich, quartz-latite tuff that fills a circular depression in the south-central part of the map area. The tuff of Comet Peak unconformably overlies lavas (the youngest being the rhyodacite of Whitlow Canyon) of the middle felsic lava sequence in the Black Point area. Farther east, in the footwall of the Elephant Butte fault, the tuff of Comet Peak overlies Proterozoic rocks along a west-dipping escarpment that is thought to be an abandoned and eroded strand of the Elephant Butte fault. The tuff of Comet Peak is overlain conformably by an upward-fining volcaniclastic unit (unit of Queen Valley) with at least three interbedded basalt lavas. Dips of strata in the unit of Queen Valley decrease upwards from over 30° to horizontal.

Included within the upper sequence is a lamproitic plug and dike (lamproite of Elephant Butte) that intrudes Proterozoic Pinal Schist in the immediate footwall of the Elephant Butte fault along the eastern edge of the map area. Its relationship to other volcanic rocks in the area is not known.

Superstition Mountains

Superstition Tuff

Definition

The Superstition Mountains are dominated by a thick succession of welded, crystal-rich, quartz-latite tuff known as the Superstition Tuff. The Superstition Tuff, as it was defined by Stuckless and Sheridan (1971), includes three separate and distinct ash-flow tuffs in the Superstition Mountains area; Siphon Draw member (24.2-24.5Ma), Dogie Spring member (18.4Ma), and Canyon Lake member (14.9Ma). Age dates as reported in Stuckless and Sheridan (1971), indicate that the "Superstition Tuff" spans nearly 10 m.y. and it is interleaved with a number of informal stratigraphic units (some of which are incorrectly referred to as formations). A more complete discussion of stratigraphic nomenclature in the western and northern Superstition Mountains in included in Skotnicki and Ferguson (1995), and a detailed summary of the area's confusing stratigraphic nomenclature has been written by Trapp (1996).

The Superstition Tuff that we have mapped in the western and southern Superstition Mountains (Skotnicki and Ferguson,1995; this report) corresponds to Stuckless and Sheridan's (1971) Siphon Draw member, which they named for the thick exposures of crystal-rich, quartz-latite tuff that makes up the high ridge of the Superstition Mountains (Siphon Draw is the major canyon that emanates from the west end of the Superstition Mountains). We believe that because the Dogie Spring and Canyon Lake members are apparently significantly younger than the Siphon Draw member, they should be redefined, either by elevation to formation status, or inclusion as members of units in which they are contained. We also recommend that the tuff Stuckless and Sheridan (1971) named Siphon Draw member should be renamed "Superstition Tuff". The Dogie Spring and Canyon Lake members occur to the north of areas mapped during our 1994-1995 field season, and we will not comment further on their correlation with volcanic units of the southern Superstition Mountains. Continued work in these areas, scheduled for the 1996-97 field season should unravel the complex stratigraphic relationships of the area.

Stuckless and Sheridan (1971) recognized at least nine flow units in their Siphon Draw member at Siphon Draw separated by thin poorly welded intervals or thin lava flows. The correlation of individual flow units in the Superstition Tuff (the Siphon Draw member of Stuckless and Sheridan, 1971) over great distances is hampered by the lack of distinctive mineralogic zonations. In the course of mapping, we were able to distinguish three prominent flow unit boundaries, one of which was thick enough to be mapped as a distinct unit in the Weavers Needle quadrangle. These boundaries are traceable from the west end of the Superstition Mountains eastward 15 km to the Miners Needle

area near Coffee Flat, and they form the basis for our definition of five informal members of the Superstition Tuff. We emphasize that definintion of these members is possible only because the flow-unit boundaries we selected are physically traceable throughout the area of the Superstition Mountains mapped during our study. The five informal members were mapped only in the structurally "inert" block that makes up the high Superstition Mountains ridge crest. This ridge crest represents a remarkably undisturbed structural block that is cut by only one significant fault, and the match of units across this fault is very good.

The five informal members of the Superstion Tuff are, in ascending order: Hieroglyphic member, Miners Needle member, Peralta Canyon member, lower Flatiron member, and upper Flatiron member. Apart from a zone of disitinctive, red-colored pumice or magma clots that characterizes much of the Hieroglyphic member, each of the members is indistinguishable in hand specimen. A stratigraphic section of the entire Superstition Tuff measured in Hog Canyon (Goldfield quadrangle) was sampled and thin sections of these rocks will be available by the winter of 1995. Criteria for identifying the informal members of the Superstition Tuff are included with our unit descriptions.

Two areas of welded, crystal-rich, quartz-latite tuff were encountered in the Superstition Mountains that we could not correlate with any of our informally defined members. These areas are separated from the main body of Superstion Tuff by major structures, and they were mapped as undivided Superstition Tuff (Ts). One of these areas is within the footwall of the Elephant Butte fault directly east of Miners Needle. We believe that this tuff is probably correlative to the Hieroglyphic member, because it depositionally overlies the oldest Tertiary volcanic rocks in the study area (Ta and Tb mafic lava flow units). The other area of undivided Superstition Tuff occurs to the north of an arcuate, east-west striking structure that we believe corresponds to the southern margin of Peterson and others' (1983) loosely defined LaBarge Canyon Cauldron. The tuff north of this structure is younger than the Peralta Canyon and Miners Needle members, and we tenatively equate it with one of (or both of) the Flatiron members.

Breccia units

The Superstition Tuff contains two kinds of breccia units, based on maximum clast size. Megabreccias contain blocks up to and greater than 10 meters in diameter, and mesobreccias contain blocks in the meter size range. The breccias interfinger with the Superstition Tuff, particularly its lower members, and they are thickest and most abundant along the southern margin of the Superstition Cauldron. Breccias are mostly clast-supported and the clasts are of 5 main lithologies: 1) crystalline basement (K-feldspar porphyritic granite, and schist or banded gneiss), 2) mafic lavas, 3) lower rhyodacite lava (Trd1), 4) dacite of San Mateo Castro Ranch (Tdl), and 5) rhyolite lava (Tr). On an outcrop scale, clast populations of the breccias are typically dominated by one of these types. Matrix consists of gradations between two types: 1) light-colored, unwelded tuff of similar composition to the host tuff (sample FS-263). 2) dark reddish brown to purple-colored, fine-grained granular material (sample FS-264) interpreted as autoclastic detritus derived from abrasion of the lithic blocks during their emplacement (probably as avalanches). The dark-colored matrix may be mixed, to varying degrees, with ash produced by synchronous eruptions of the Superstition Tuff sequence, or epiclastic detritus which is known to occur locally at the base of the Superstition Tuff sequence.

Megabreccias are most abundant along the southern margin of the Superstition Cauldron directly west of this study area (see Skotnicki and Ferguson, 1995), but in this study area, they were found only along the La Barge Canyon Cauldron margin.

Some of the monolithic breccias may be autobrecciated lava flows that were erupted during emplacement of the Superstition Tuff. An example of one of these breccias is the Trx unit of the

Dacite Cliffs area. Other good examples of these kinds of breccias, composed of either the dacite of San Mateo Castro Ranch (Tdl) or basalt and andesite lavas, occur directly west of the study area.

Lava units

In the western Superstition Mountains of this study area three lava units, which are probably equivalent with petrographically similar units found in the Whitlow Canyon Area, are either overlain by or interfinger with the oldest (Hieroglyphic) member of the Superstition Tuff. Because these lava units occur in the same stratigraphic order as their counterparts in the Whitlow Canyon Area, they have been assigned Whitlow Canyon Area stratigraphic names even though the flows are not connected. These flows are, in ascending order: Trdl (older rhyodacite lava), Tdl (dacite of San Mateo Castro Ranch), and Tr (rhyolite lava). Farther east, near Coffee Flat, undivided Superstition Tuff depositionally overlies a sequence of basalt and andesite lavas at one small area, and it appears that this steeply west-dipping contact may be a part of the Superstition Cauldron's eastern margin. This west-side-down escarpment and the Superstition Tuff is intruded by dikes of two units that may have counterparts in the Whitlow Canyon Area. The oldest of these is the Tdl (dacite of San Mateo Castro Ranch), which is in turn intruded by a rhyolite plug and its associated dikes (Tr). A swarm of dikes emanating from bodies of the lower rhyodacite lava of Coffee Flat Mountain cuts across all other units and faults in the area.

CAULDRONS

A cauldron is the inferred remains of a caldera after its geomorphic expression has been largely modified by later geologic processes. The southern margins of the Superstition Cauldron and the younger La Barge Canyon Cauldron are well exposed in the southern Superstition Mountains. In the southern Whitlow Canyon Area, a circular depression filled with the tuff of Comet Peak may represent a younger cauldron. The approximate location of these structures is shown on Figure 5.

SUPERSTITION CAULDRON

The southern topographic margin of the Superstition Cauldron corresponds very closely to the steep south-facing topographic scarp of the Superstition Mountains. The topographic inversion is probably the result of two phenomena; selective erosion, and structural resurgence. The relatively massive, and resistant, cauldron-filling Superstition Tuff is more resistant to erosion than the highly fractured and complex crystalline basement which forms the southern wall of the cauldron.

To the east of Peralta Canyon, where the margin is undisrupted by younger faults parallel to the margin, differential erosion explains the apparent topographic inversion. To the west of Barks Canyon, north-side-up uplift of the intracauldron block exaggerates the topographic inversion resulting in the impressive 5,000' peaks of the western Superstition Mountains. The north-side-up uplift occurs along an east-west striking, steeply north-dipping fault zone that probably is a reactivation of the cauldron margin. North-side-up uplift increases westward from the mouth of Barks Canyon from less than a few hundred feet to over 2,000 feet (as indicated by offset of the bases of the Flatiron members of the Superstition Tuff) directly east of the mouth of Hieroglyphic Canyon in the Goldfield quadrangle (Skotnicki and Ferguson, 1995).

North-side-uplift of the intracauldron block dies out just to the east of the mouth of Barks Canyon, and the margin is well exposed at a couple of localities east of Miners Needle. At these localities, the margin is a sharp, steeply north-dipping (approximately 50° to 70°) contact with densely welded tuff directly overlying crystalline basement.

To the east of the Elephant Butte fault the cauldron margin steps southward nearly a kilometer before it curves northeastward and is intruded by a complex swarm of dikes which were discussed in

a previous section (lava units of the Superstition area).

LA BARGE CANYON CAULDRON

The southern margin of the La Barge Canyon Cauldron (Peterson and others, 1983) crosses into the extreme north-central edge of the study area. It is defined by an arcuate, steeply north-dipping fault/shear zone that cuts off the contacts between Hieroglyphic, Miners Needle, and Peralta Canyon members of the Superstition Tuff. To the east the margin is a brittle fault zone, but to the west it appears to be a shear zone with lenticular shaped bodies of basalt and andesite lava strung out along the contact. The welded Superstition Tuff to the north of the shear zone displays steeply dipping eutaxiitic foliations that, because the dips are so erratic, suggest ductile behavior of the tuff occurred in this area.

FLORENCE JUNCTION CAULDRON

The Florence Junction Cauldron (Sheridan and others, 1970) is semi-circular depression filled with densely welded tuff of Comet Peak. It is defined on its northern and eastern margins by gently, inward-dipping contacts. The youngest unit it overlaps is the rhyodacite of Whitlow Canyon. The Elephant Butte fault cuts off the eastern edge of the depression. In the footwall of the Elephant Butte fault, the tuff of Comet Peak buries a shallowly west-dipping escarpment which may be an abandoned strand of the main fault, a west-facing cauldron margin, or both of these things. The southern and western margins of this depression are concealed by Quaternary alluvial basin fill.

STRUCTURAL GEOLOGY

PRE-TERTIARY STRUCTURE

Early and Middle Proterozoic

The Pinal Schist was intensely deformed and metamorphosed, and later intruded by numerous plutonic rocks of probable Midde Proterozoic age. The area then experienced uplift and eroosion prior to depostion of the Middle Proterozoic Apache Group. Higher textural grades of Pinal Schist are exposed along the sub-Apache Group unconformity towards the north, suggesting that the crust in this area underwent an episode of north-side-up tilting sometime during the Middle Proterozoic.

The prominent schistosity of the Pinal Schist is broadly folded, and locally it appears that a younger, post-peak metamorphic crenulation cleavage is axial planar to these folds. The age of this folding, and whether or not it affects the younger Apache Group, is not known.

Middle Proterozoic through early Cenozoic

The middle Proterozoic Apache Group is exposed sporadically across the study area, and in most areas the contact is an angular unconformity. The fact that the same stratigraphic sequence is exposed with differing structural attitudes over such a large area implies that these rocks were deformed prior to deposition of the Mid-Tertiary volcanic succession. The Apache Group also shows evidence of faulting and gentle warping that can not always be traced upwards into the overlying Tertiary volcanic rocks. Some of this deformation might be related to intrusion of abundant diabase dikes and sills, but in at least one area it is clear that the Apache Group is folded about a nNNW-striking anticline. This antcline is exposed in the southeasternmost corner of the Weavers Needle quadrangle along the divide between Randolf Canyon and Milk Ranch Creek. The structure is slightly assymetric, dipping steeper to the northeast, and it appears that it may represent the northern end of a broad anticlinorium cored by Pinal Schist. The age of this folding is very loosely constrained between Middle Proterozoic and Mid-Tertiary.

TERTIARY BASIN AND RANGE EXTENSION

The geologic map pattern of the study area is principally the result of Basin and Range style extension. Many normal faults were active during or in between eruptions of several of the study area's widespread volcanic units. The main extensional fault is the west-side-down Elephant Butte fault, which also appears to have had an influence on the distribution of many of the study area's volcanic units. It may also have acted as the eastern margin of both the Superstition and Florence Junction Cauldrons. An early phase of east-side-down motion along the Elephant Butte fault zone is suggested by the abrupt appearance of a fairly thick and extensive unit (dacite lava of Randolf Canyon (Tdx)) to the east of the fault. In addition, there is an important northeast-side down fault in its hangingwall that is buried by the Tdu (dacite of Buzzards Roost) and both of the Coffee Flat lavas, but it cuts the Trd (rhyodacite of Whitlow Canyon) unit. This fault is also offset by younger, west-side-down faults.

Normal faults of the Whitlow Canyon area in the hangingwall of Elephant Butte fault are dominately north-striking and west-side-down with tilts of the volcanic units only slight to moderate. To the north, faults swing towards the northwest and west as their traces enter the Peralta-Coffee Flat valley. The lack of stratigraphic markers and poor exposures in this valley make it difficult to trace structures across the valley. The gentle easterly tilting and minor extension (22%) of the Whitlow Canyon Area's volcanic sequence is not expressed in the inert structural block of the southern Superstition Mountains. This implies either that the Superstition Cauldron postdates most of the deformation in the Whitlow Canyon area, or that extensional strain was transferred along some sort of transfer zone or accomodation zone parallel to the Peralta-Coffee Flat valley.

The Superstition Tuff and its southern cauldron margin are cut by the Elephant Butte fault, and both structures are cut by dikes and plugs of the Coffee Flat Mountain lavas. West-facing escarpments overlapped by welded tuff are present in the footwall of the Elephant Butte fault in two areas; at the west end of Coffee Flat Mountain, and in the Comet Peak area. These escarpments appear to be abandoned, shallowing-dipping strands of an older fault system that was active during emplacement of the study area's two prominent welded tuff sequences. The Elephant Butte fault may also be linked to a phase of lamproitic magmatism, because a dike and plug of these rocks are located along the fault at Elephant Butte.

Although the Elephant Butte fault is clearly a west-side-down structure there is evidence of up to 1km of dextral, strike-slip motion. This evidence is in the Miners Needle-Coffee Flat area where the fault offsets two oppositely dipping contacts with the same apparent dextral offset. The two contacts are: the south-dipping, Proterozoic basement-Tertiary volcanic succession unconformity; and the north-dipping, Superstition Cauldron margin. However, the assumption that the cauldron margin in this complex area is well-behaved may be incorrect, and the fact that a third contact, a northeast-striking, steeply dipping Pinal Schist-porphyritic granite intrusive contact is not offset across the fault complicates matters. The reason for this may be because the intrusive contact, which is believed to dip northwest, intersects the fault along a line parallel to the rake of fault motion.

SUMMARY

The Superstition Cauldron's southern topographic margin is spectacularly exposed at a number of localities along the range's steep south-facing escarpment. Directly to the south lies a broad valley underlain by Proterozoic basement (see cross-sections A-A', B-B') which marks the boundary between the Superstition Mountains on the north and the Whitlow Canyon Area on the south. The valley represents the highly fractured, easily eroded, and therefore valley-forming rim of the cauldron. The intracauldron Superstition Tuff, referred to previously as the Siphon Draw Member of the Superstition Tuff (Stuckless and Sheridan, 1971), has been subdivided into five

informal members (Skotnicki and Ferguson, 1995; Ferguson and Skotnicki, 1995), whose boundaries are readily visible along the range's steep south-facing escarpment. These units comprise a remarkably undisturbed, flat-lying structural block bounded to the south, east, north, and northwest by moderately to severely tilted volcanic rocks. In most areas these tilted rocks are older than the Superstition Tuff, but directly to the north Superstition Tuff is also involved in the tilting (Skotnicki and Ferguson, 1995). Current and future detailed mapping projects in collaboration with $^{40}Ar/^{39}Ar$ sanidine dating of principal units should help constrain more precisely the timing and spatial distribution of tilting in the area.

The Whitlow Canyon Area consists of a greater than 1 km thick sequence of pre-Superstition Tuff lava flows that have been tilted between 10 and 30 degrees to the east. The lavas are overlain in the Florence Junction area by the Superstition Tuff's nearest preserved outflow sheet which, because it is isolated from the main mass within the cauldron, has been provisionally named tuff of Comet Peak. The Whitlow Canyon Area is transected by the Elephant Butte fault, a major west-side-down, dip-slip, normal fault that is probably continuous with the concealed and inferred, western range-bounding fault of the southeasterly adjacent Mineral Mountain Area. The pre-Superstition Tuff volcanics of the Whitlow Canyon area are weakly extended (22%). A strike-normal distance of 7.45 km along cross-section C-C' (Sheet 2) restores to about 6.1 km, and most of this extension occurs across the Elephant Butte fault.

The Tertiary volcanic stratigraphic sequence to the east of Elephant Butte fault includes all of the widespread units found in areas to the west plus a few others that are restricted to the east side of the fault, one of which is quite thick along the fault. It is as if the fault were originally east-side-down and acted as a barrier to the westward flow of lavas. In fact, there are a number of other splays of the main fault in the Buzzards Roost area that appear to have accommodated motion in both directions at different times during emplacement of the lavas. To the north, the Elephant Butte fault may coincide with the eastern margin of the Superstition Cauldron. The Superstition Tuff to the east of the fault can not be assigned, based on field observation alone, to any of the members found to the west. Farther south, in the Comet Peak area (cross-section D-D'), an abandoned eastern strand of the fault was apparently exposed as a west-facing scarp (erosional?) during emplacement of the tuff of Comet Peak.

Regionally, the Elephant Butte fault represents the westernmost fault of a series of major faults with similar geometries (but not necessarily kinematics) in the Mineral Mountain area. It also represents the approximate eastern limit of pre-Tertiary deformation of the Middle Proterozoic Apache Group. This deformation is expressed by local, open to close folding of Mescal Limestone (see east end cross-section C-C'), and a broad, north-striking, anticlinal warp of the Apache Group cored by Pinal Schist (see cross-section A-A'). A widespread angular discordance between bedding of the Apache Group and the basal Tertiary unconformity may be a result of broad folding of the Apache Group or a pre-volcanic phase of Basin and Range style tilting.

REFERENCES

Livingstone, D.E., 1969, Geochronology of older Precambrian rocks in Gila County, Arizona: University of Arizona, Ph.D. dissertation, Tucson, 224 pp.

Peterson, D. W., 1968, Zoned ash-flow sheet in the region around Superior, Arizona: Arizona Geological Society, Southern Arizona Guidebook III, p. 215-222.

Peterson, D. W., Jinks, J. E., Miller, W. R., Motooka, J. M., and Wynn, J. C., 1983, Mineral Resource Potential of the Superstition Wilderness and Contiguous Roadless Areas, Maricopa, Pinal, and Gila Counties, Arizona: United States Geological Survey Open-File Report 83-885, 75 pp., 3 Plates.

Ransome, R. L., 1903, Geology of the Globe copper district, Arizona: United States Geological Survey Professional Paper 12, 168 pp.

Sheridan, M. F., 1978, The Superstition Cauldron Complex, in Burt, D. M., and Pewe, T. L., (eds.) Guidebook to the geology of central Arizona: State of Arizona Bureau of Geology and Mineral Technology, the University of Arizona, Special Paper no. 2, p. 85-89.

Sheridan, M. F., Stuckless, J. S., and Fodor, R. V., 1970, A Tertiary silicic cauldron complex at the northern margin of the Basin and Range province, central Arizona, U.S.A.: Bulletin Volcanologique, v. 34, p. 649-662.

Silver, L. T., Williams, I. S., and Woodhead, J. A., 1980, Uranium in granites from the southwestern United States: Actinide parent-daughter systems, sites, and mobilization - First year report: U.S. Department of Energy GJBX-45(81), 380 pp.

Skotnicki, S. J., and Ferguson, C. A., 1995 Geologic map of the Goldfield and norhtern portion of the Superstition Mountains SW 7.5' quadrangles, Pinal County, Arizona: Arizona Geological Survey Open-File Report 95-9, scale 1:24,000.

Stuckless, J. S., and Sheridan M. F., 1971, Tertiary volcanic stratigraphy in the Goldfield and Superstition Mountains, Arizona: Geological Society of America Bulletin., v. 82, p. 32353240.

Stuckless, J. S., and Naeser, C. W., 1972, Rb-Sr and fission track age determinations in the Precambrian plutonic basement around the Superstition Volcanic field, Arizona: U.S. Geological Survey, Professional Paper 800-B, p. 191-194.

Trapp, R. A. 1996, History of stratigraphic name usage for Tertiary rock units in the Superstition Mountains/Goldfield Mountains area: Arizona Geological Survey Open-File Report 96-7, 15 pp.

Trapp, R. A., and Reynolds, S. J., 1995, Map showing names and outlines of physiographic areas in Arizona used by the Arizona Geological Survey: Arizona Geological Survey Open-File Report 95-2a, scale 1:1,000,000.

UNIT DESCRIPTIONS FOR THE FLORENCE JUNCTION AND SOUTHERN PORTION OF THE WEAVERS NEEDLE 7.5' QUADRANGLES

ARIZONA GEOLOGICAL SURVEY OPEN-FILE REPORT 95-10 (revised May, 1996)

Quaternary and Proterozoic unit descriptions apply to all areas. Tertiary unit descriptions apply to two different physiographic areas; Superstition Mountains and Whitlow Canyon Area. Tertiary units that occur in both areas are listed under both headings.

RECENT

d **disturbed ground**: Areas disturbed by man, consisting of the Whitlow Ranch Flood Control Basin Dam, deposits of rock removed from the spillway and deposited in two nearby areas, and disturbed areas in and around an open-pit (perlite?) mine in the Black Point area.

QUATERNARY

Qa **alluvium and colluvium**: Unconsolidated to poorly consolidated alluvium, locally including talus along steep mountain sides.

Qao **older alluvium and colluvium:** Poorly consolidated older alluvium, distinguished by its occurrence in high-standing terraces or capping hilltops. The older alluvium of the Queen Valley area is characterized by a great abundance of Pinal Schist and vein quartz clasts.

TERTIARY UNITS OF THE SUPERSTITION MOUNTAINS

Tru **upper rhyolite lava**: Light gray to purple, aphanitic, highly brecciated lava with a trace of small (< 1mm) biotite phenocrysts. The lava is mixed with lithic-rich tuffaceous zones. Unit is restricted to the Geronimo Cave area of Peralta Canyon.

Trut **lithic tuff:** Tuffs related to, and underlying the upper rhyolite lava (Tru). The tuff contains a phenocryst assemblage similar to that of the underlying Peralta Canyon member of Superstition Tuff, but because it is also very rich in rhyolite lava clasts it was mapped separately. Unit is restricted to the Geronimo Cave area of Peralta Canyon.

Tfi **fine-grained intrusive rhyodacite**: Moderately crystal-rich dikes and plugs in the Coffee Flat area containing 1 to 4 mm phenocrysts of feldspar, quartz, and minor biotite in a tan or gray matrix. The unit intrudes both Tfu and Tfl units, and its dikes commonly form resistant ridges.

Tfu **upper rhyodacite lava of Coffee Flat Mountain**: Crystal-rich lava containing phenocrysts of euhedral biotite, clear to light gray plagioclase, and embayed quartz. The lava is yellow-gray on fresh surfaces, tan to medium gray on weathered surfaces. The unit is named for excellent exposures on Coffee Flat Mountain where a slightly vitric zone forms prominent dark gray cliffs.

Tfl **lower rhyodacite lava and intrusions of Coffee Flat Mountain**: Crystal-rich lava and intrusive bodies containing phenocrysts of subhedral gray plagioclase, light gray chalky K-feldspar (locally with gray cores and white rims), rounded embayed quartz, and biotite, all 1 to 10 mm wide. Aphanitic matrix is tan to pale grayish-green. This unit intrudes Pinal Schist, lower dacite lava (Tdl) dikes, a rhyolite plug (Tr), the Superstition Tuff (Ts), and the southern margin of the Superstition cauldron northwest of Coffee Flat.

Ts **Superstition Tuff, undifferentiated**: Quartz-latite ash-flow tuff containing 40-50% phenocrysts of plagioclase (20-25%), embayed quartz (10-15%), sanidine (10-15%), and abut 1% biotite, plus traces of hornblende, shene, and opaque minerals. The size range of the other phenocrysts is 1 to 5 mm. The Superstition Tuff is separated into numerous sub-units by poorly welded to unwelded zones of varying thickness (1 to 20 meters) that are also commonly lithic-rich. Some of the zones also correspond with thin autobrecciated lava flows. Many of these units can be correlated for great distances along the steep front of the Superstition Mountains by physically tracing out the more prominent unit boundaries, and this technique forms the basis for the definition of a number of informal members.

Tsf **Superstition Tuff, upper and lower Flatiron members**: Two prominent layers (lower, Tsfl and upper, Tsfu) named for The Flatiron, which makes up the high peaks at the west end of the Superstition Mountains (Goldfield 7.5' quadrangle). The basal contacts of each member are marked by prominent benches or ledges that can be traced eastward from The Flatiron to the highest point of the Superstition Mountains (near Hieroglyphic Spring on the Goldfield 7.5' quadrangle). The basal contact of the lower Flatiron member is the narrow ledge in the midst of the big cliff that makes up The Flatiron. This ledge corresponds to a 3 to 10 meter-thick, lightcolored, lithic-rich, poorly welded to unwelded zone with a sharp base and a gradational upper contact into densely welded tuff. The base of the upper Flatiron member forms the broad flat area above the same major cliff. From The Flatiron area, the base of the lower member, can be physically traced to its currently known eastern limit just west of Fremont Saddle at the head of Peralta Canyon. Note that the lower cliff of The Flatiron is composed of the Peralta Canyon member.

Tsp **Superstition Tuff, Peralta Canyon member**: A thick, typically massive unit that, to the west of Fremont Saddle underlies The Flatiron members and to the east underlies the upper rhyolite lava (Tru). The base is defined by the top of Miners Needle member (Tsm). Locally, the member includes numerous breaks defined by thin (<2 m), recessive, inversely graded zones interpreted as basal 2a layers.

Tsm **Superstition Tuff, Miners Needle member:** This unit is named for a package of several thin, welded or poorly welded flow units that crop out through the middle of Miners Needle. The flow units are bounded by sharp contacts, and at the base of at least one of the flow units a 1 to 3 meter-thick pyroclastic surge sequence was noted at numerous localities. This surge sequence(s) is characterized throughout the study area because its upper and lower contacts dip consistently 10° to 20° steeper to the north than the eutaxitic foliation in the surrounding welded tuff. Towards the west, the Miners Needle member thins to less than 2-3 meters, and consists of a lithic-rich unwelded tuff zone that is shown without thickness (i.e. the contact between Hieroglyphic and Peralta Canyon members) throughout much of the adjoining Goldfield quadrangle. In some areas of the Goldfield quadrangle, lithic-rich tuffs of the Miners Needle member grade into thin autobrecciated dacite and rarely mafic lava flows. The

presence of lava flows within Superstition Tuff, however, should not be used to identify Miners Needle member, because dacite and rhyolite lava flows occur at several other levels within the Superstition Tuff, particularly in the western Superstition Mountains.

Tsh **Superstition Tuff, Hieroglyphic member**: A thick sequence of densely welded tuff that underlies Miners Needle member. The lower part of this unit in its type area of Hieroglyphic Spring (Goldfield quadrangle) is dark reddish brown in color and contains distinctive, dark red-colored, poorly compacted pumice fragments or magma clots. The abundance of these red clots or pumice diminishes upward, and the upper 100-150 meters of the member is indistinguishable from the overlying members. The unit contains numerous breccia units along the steep south-facing front of the Superstition Mountains, and the tuff is commonly poorly welded to unwelded in these areas.

Tsx **Superstition Tuff, mesobreccia**: Lithic breccias contained within or occurring at the base of the Superstition Tuff. Breccias are mostly clast-supported and clasts, although as large as several meters, are typically less than 1 meter in size. The clasts are of 5 main lithologies: 1) crystalline basement (K-feldspar porphyritic granite, and schist or banded gneiss), 2) mafic lavas, 3) lower rhyodacite lava (Trd1), 4) lower dacite lava (Td1), and 5) rhyolite lava (Tr). On an outcrop scale, clast populations of the breccias are typically dominated by one of these types. Matrix consists of gradations between two types: 1) light-colored unwelded tuff of similar composition to the host tuff (sample FS-263). 2) dark reddish brown to purple fine-grained granular material (sample FS-264) interpreted as autoclastic detritus derived from abrasion of the lithic blocks during their emplacement (probably as avalanches). The dark-colored matrix may be mixed, to varying degrees, with ash produced by synchronous eruptions of the Superstition Tuff sequence, or epiclastic detritus which is known to occur locally at the base of the Superstition Tuff sequence.

Tsxg **Superstition Tuff, megabreccia**: Lithic breccias with matrix similar to the Tsx unit, but distinguished because of the exceptionally large size (greater than 10s of meters) of the lithic blocks. The large lithic blocks are also characteristically monolithic, either rhyolite lava (Tr), dacite lava (Tdl), or mafic lavas and it appears in some areas that these units may be parts of dismembered lava flows interfingered with the Superstition Tuff sequence (see also Trx unit description).

Trx **rhyolite lava breccia**: Monolithic breccia composed of the rhyolite lava which makes up the Dacite Cliffs. The breccia forms a layer with abrupt, but gradational within a few centimeters, contacts above and below into welded Superstition Tuff (Tsh, Hieroglyphic member) on the north side of the Dacite Cliffs. This unit may be correlative with portions of the Superstition Tuff megabreccia unit (Tsxg) in the southeastern Goldfield quadrangle.

Tr **intrusive rhyolite**: Dikes, plugs, and intrusive bodies containing up to 5% small phenocrysts of feldspar, biotite, $\pm$ quartz. This rhyolite occurs in two areas of the Superstition Mountains: 1) at the northwest corner of Coffee Flat as a rhyolite plug intruding Superstition Tuff, and a dike of Tdl (dacite of San Mateo Castro Ranch), 2) at the Dacite Cliffs where the rhyolite is overlain by Superstition Tuff, and appears to be related to a swarm of rhyolite dikes that are probably connected with the rhyolite lavas of Tule Canyon.

Tdl **lower dacite lava**: Intrusive dacite lava petrographically identical to the dacite of San Mateo Castro Ranch, a widespread unit of the Whitlow Canyon area.

Ta **andesite and basaltic andesite lava**: Mafic flows similar petrographically to flows of the Ta unit in the Whitlow Canyon area.

Trdl **lower rhyodacite lava**: Crystal-rich, lava with abundant equant feldspar, variable amounts of embayed quartz, and euhedral coarse-grained biotite phenocrysts. Petrographically similar to the Trdl unit of the Whitlow Canyon area. Unit is present only along extreme west edge of the study area.

TERTIARY UNITS OF THE WHITLOW CANYON AREA

Tq **unit of Queen Valley**: Medium to thick-bedded volcaniclastic, boulder-sized debris-flows, conglomerates, pebbly sandstones, and medium-grained sandstones. Clasts are derived mostly from the immediately underlying rhyodacite of Whitlow Canyon (Trd) or tuff of Comet Peak (Tcp), and the sandy matrix is typically tuffaceous. Named for exposures in and around the community of Queen Valley. Some of the sandstone exposed below the uppermost basalt lava in the southeast corner of the basin are interpreted as eolian.

Tqb **basalt lava**: Two basalt lavas that are interbedded with, and one lava that overlies sedimentary rocks of the unit of Queen Valley.

Teb **lamproite of Elephant Butte**: Intrusive, moderately crystal-poor, dark gray colored, biotite-rich lava. This rock is referred to as a lamproite because of its very abundant and coarse-grained (locally greater than 2cm wide) biotite phenocrysts. Unit is restricted to the Elephant Butte area where it consists of a plug and a northeast-striking dike intruding Proterozoic rocks just to the east of the west-side-down Elephant Butte fault. Relationship to other Tertiary units is unknown. An exposure of Tt (generic tuff) may be related.

Tcp **tuff of Comet Peak**: Crystal-rich, quartz-latite, welded ash-flow tuff containing 40-50% phenocrysts of plagioclase (20-25%), embayed quartz (10-15%), sanidine (10-15%), and abut 1% biotite, plus traces of hornblende, shene, and opaque minerals. Its quartz phenocrysts are strongly embayed. The base of the tuff is locally a dark-colored vitrophyre displaying lineated pumice fragments which consistently trend NNE. The base of the unit at Dromedary Peak contains greater than 50% angular Pinal Schist clasts. The tuff of Comet Peak has previously been referred to as Superstition Tuff, but it was separated merely because of its geographic isolation from the Superstition Tuff in the Superstion Mts, and the Apache Leap Tuff which occurs farther east. The tuff of Comet Peak fills a cauldron-like depression in the south-central part of the map area, originally referred to as the Florence Junction Cauldron (Sheridan and others, 1970).

Tcpu **tuff of Comet Peak, poorly welded interval**: Lithic-rich, poorly welded zone of the tuff of Comet Peak recognized in only one area along boundary of Florence Junction and Superstition Mountains southeast 7.5' quadrangles.

Tfu **upper rhyodacite lava of Coffee Flat Mountain**: Crystal-rich lava containing phenocrysts of euhedral biotite, clear to light gray plagioclase, sanidine, and embayed quartz. The lava is yellow-gray on fresh surfaces, tan to medium gray on weathered surfaces. The unit is named

for excellent exposures on Coffee Flat Mountain where a slightly vitric zone forms prominent dark gray cliffs. A dome of this lava occurs directly south of Coffee Flat

Tful **older flow unit of the upper rhyodacite lava of Coffee Flat Mountain**: Moderately crystal-rich lava recognized only at the base of the lava dome complex just south of Coffee Flat. The lava contains phenocrysts of embayed quartz, clear feldspar (sanidine and/or plagioclase), and very minor mafic minerals. The absence of mafic minerals distinguishes this flow from the younger Tfu flow.

Tdu **upper dacite lava (dacite of Buzzards Roost)**: Moderately crystal-rich lava containing 15-20% phenocrysts of feldspar, $\leq$1% biotite, and rare embayed quartz. The lava is light colored and has thick (5-15 meters) basal vitric autobreccia (Tdub) and vitrophyre (Tduv) units that were locally differentiated.

Tdub **upper dacite lava, breccia**: Vitric autobreccia which occurs locally at the base of the upper dacite lava (Tdu).

Tduv **upper dacite lava, vitrophyre**: Basal vitrophyre locally present at the base of the upper dacite lava (Tdu).

Trd **rhyodacite lava (rhyodacite of Whitlow Canyon)**: Moderately crystal-rich rhyodacite lava containing between 10% and 20% phenocrysts of feldspar, embayed quartz, minor biotite and hornblende. Lava is typically dark colored; dark gray, maroon, or brown, and a semi-vitric, black, basal portion is locally distinctive. Locally, the unit is fine-grained and strongly flow-banded, particularly near the base, and in its central outcrop area it contains extensive breccias locally interbedded with thin-bedded, undifferentiated lithic tuffs. Dikes mapped as Trd crosscutting the rhyolite dike swarm near the mouth of Peralta and Barks canyons may be correlative with lava flows of this unit in the Whitlow Canyon Area.

Tr **rhyolite lava (rhyolite lavas of Tule Canyon)**: Crystal-poor rhyolite lavas typically containing less than 5% phenocrysts of feldspar, quartz, and minor biotite. In the Quarter Circle U Ranch area, three extensive flows of these lavas are separated by bedded, unwelded tuff units (Tt), and the lower flows are intruded by steeply dipping, flow banded dikes of similar composition. In many areas, these lava flows are associated with 10-30 meter thick, clast-supported, rhyolite lava-monomict, lithic tuffs interpreted as block and ash-flows related to the lava flows, and these were not always differentiated (as tuff units). Rhyolite lava mapped as Tr at the confluence of Randolf and Red Tanks Canyons represents the easternmost exposure of this unit.

Tt **unwelded, bedded tuff**: Generic, unwelded, bedded, and typically lithic-rich ash-flow and ash-fall tuffs that occur between many of the area's lava flows. The most prominent of these occur between the rhyolite lavas of Tule Canyon (Tr), and below the dacite lava of Buzzard's Roost (Tdu) in the northeastern corner of the study area.

Tdx **crystal rich dacite lava (dacite of Randolf Canyon)**: Crystal-rich dacite lava, found only to the east of the Elephant Butte fault that contains 20-30% phenocrysts of feldspar, biotite, and minor amounts of quartz. The phenocrysts are relatively small (<4 mm) and biotite is euhedral. The lava is locally very thick (over 100 meters), and includes several flow breaks.

Tbb **bedded breccia**: Bedded volcanic breccia underlying the dacite of Randolf Canyon (Tdx) unit in upper Randolf Canyon.

Ta **andesite or basaltic andesite lava**: Undifferentiated mafic lava flows typically containing less than 10% plagioclase and lesser amounts of altered mafic minerals (probably pyroxenes or amphiboles).

Tau **upper andesite lava**: Crystal-poor andesitic lava flow containing between 5% and 10% plagioclase phenocrysts and minor amounts of mafic minerals (pyroxene?). Characterized to some degree by a vitric zone along its contacts which is commonly altered to a light greenish color. Unit is differentiated from generic andesite lavas (Ta) only in northwest corner of map area (west of Quarter Circle U Ranch).

Tdl **lower dacite (dacite of San Mateo Castro Ranch)**: Moderately crystal-poor to moderately crystal-rich dacite lava containing between 5 and 15% phenocrysts of small (less than 2-4mm), rectangular plagioclase, biotite, and hornblende. Its basal and upper contacts are often marked by thin basalt flows (Tb), and in some areas, basalts or other mafic lavas may occur within this unit. The matrix is typically gray-pink to light maroon colored, but locally it can be dark-colored. Varieties with dark matrix are very similar in appearance to the overlying andesite lava (Tau), and the presence of biotite is diagnostic.

Tal **lower andesite lava**: Crystal poor, nearly aphyric, mafic lava flow of probable andesitic or basaltic andesitic composition. Unit is differentiated from generic andesite lava (Ta) only in northwest corner of map area.

Trdl **lower rhyodacite lava**: Moderately crystal-rich intermediate lava containing 20-35% phenocrysts of relatively large (2-6mm), blocky feldspar, embayed quartz, and euhedral biotite. Quartz content varies greatly from trace amounts to several percent.

Ttq **tuff of Quarter Circle U Ranch**: Crystal-rich, poorly welded and locally lithic-rich rhyodacite ash-flow tuff containing phenocrysts of embayed quartz, feldspar, and biotite. Very similar in appearance to poorly or moderately welded Superstition Tuff, and it may correlate with parts of the Hieroglyphic member or the Apache Leap Tuff.

Tbcg **coarse-grained basalt/basaltic andesite**: Mafic lavas containing 2 to 10 mm wide phenocrysts of light gray plagioclase, dark green pyroxene (or olivine?) and red opaque minerals. Unit is differentiated from other mafic lavas (Ta or Tb) in only two areas: 1) south of Milk Ranch where it overlies a finer-grained basalt lava along a discontinuous, bedded, lithic tuff (Tt), and 2) in a prominent saddle directly east of Quarter Circle U Ranch.

Tb **basalt lava**: Undifferentiated basaltic lavas containing varying abundances of plagioclase, pyroxene, and olivine phenocrysts (typically altered to iddingsite). Lavas occur at numerous stratigraphic levels. A relatively thick flow(s) commonly occurs at the base of the Tertiary volcanic sequence, and numerous other thin flows occur between other lavas, mostly near the base of the Tertiary section.

Tc **conglomerate**: Pre-volcanic sedimentary unit found in only the northeast corner of Florence Junction quadrangle. The unit consists of dark red to brown-colored conglomerate and pebbly

sandstone, containing clasts of Apache Group, and granitic lithologies.

Tx **generic breccia**: Poorly exposed (clast-supported?) mesobreccia composed chiefly of angular to sub-angular pre-volcanic clasts (Pinal Schist, Apache Group, or granitoid). Unit is restricted to a small area intruded by numerous dikes at the northwest corner of Coffee Flat. The breccias may represent avalanche deposits along the southern margin of the Superstition Cauldron.

MIDDLE PROTEROZOIC

Ya **Apache Group**: Undifferentiated

Yd **diabase**: Fine and rarely medium-grained dioritic plutonic bodies (sills and dikes) commonly, but not always, displaying diabase texture. Bodies intrude all units of the Apache Group.

Yb **basalt**: Coarse-grained, plagioclase-rich basaltic lava. Because mafic lavas at the base of the Tertiary sequence are difficult to distinguish from this unit, it is only recognized where it underlies the "pre-volcanic" conglomerate unit (Tc).

Ym **Mescal Limestone**: Light-gray and rarely lavender-colored massive, thick-bedded or laminated, medium-bedded limestone and dolostone. Some of the laminations appear to be algal in origin, and locally stromatolites are present.

Yq **Dripping Springs Quartzite**: Medium and rarely thick-bedded cross-bedded and parallel-laminated pink to red colored or rarely dark gray sandstones. Most of these sandstones are quartz arenites or feldspathic arenites, but locally dark gray arkose is abundant.

Yc **Barnes conglomerate**: Medium to thick-bedded, pink to dark gray colored, pebbly, arkosic sandstones and moderately well-sorted conglomerate. Rounded pebbles and cobbles are composed chiefly of vein quartz or chert (jasper is very common), but also granitic rock fragments. Large metamorphic rock fragments are rare to absent distinguishing this conglomerate from the Scanlan Conglomerate (basal unit of the Apache Group).

Yr **rhyolite**: Sericitized, light-colored rhyolite that occurs as both flow-banded sills or plugs, and bedded tuff.

Yp **Pioneer Formation**: Dark brown to red colored, argillite and thin-bedded, silty argillite characterized by the presence of spherical, light-colored reduction spots.

Ys **Scanlan conglomerate**: A thin unit of dark colored, poorly sorted, crumbly conglomerate containing abundant granitic and metamorphic rock fragments. Distinguished from Barnes conglomerate by its position directly overlying granitic basement and because it contains abundant metamorphic rock fragments. Recognized only at one exposure (NE/4 sec. 33, T1N, R10E).

MIDDLE TO EARLY PROTEROZOIC PLUTONIC ROCKS

YXq **quartz monzonite**: Medium-grained, equigranular, quartz monzonite with 10-25% mafic minerals (biotite and hornblende). Unit is exposed at Dromedary Peak in extreme southeast corner of study area.

YXg **porphyritic granitoid**: K-feldspar porphyritic, medium-grained monzogranite, granodiorite, or quartz monzonite, locally weakly foliated. Characterized by pink K-feldspar phenocrysts, and distinguished from other felsic granitoids by its relatively high abundance (5 to 15%) of mafic minerals (biotite and hornblende). Possibly correlative with the Ruin Granite.

YXge **equigranular granitoid**: Equigranular, medium-grained, biotite-bearing granite found only directly southeast of Comet Peak.

YXd **diorite**: Medium to fine-grained diorite, locally weakly foliated. Possibly correlative with the Madera Diorite.

YXv **quartz veins**: Zones of abundant quartz veins within the YXg (granitoid) map unit directly west of Coffee Flat. Defined loosely as areas in which quartz veins constitute greater than 50% of the bedrock.

EARLY PROTEROZOIC

Xp **Pinal Schist, undifferentiated**: Complex metamorphic suite of polydeformed supracrustal rocks. The unit is dominated by metapelites, but also includes fairly thick units of psammites, and much thinner marbles, calc-silicates, quartzites, and amphibolites. The degree of metamorphism, based purely on grain-size and degree of segregation of metamorphic minerals, increases from south to north from a broad zone of phyllites, fine-grained mica schists, and spotted andalusite or cordierite schists that underlie much of the Florence Junction quadrangle to a coarse-grained mica schist or paragneiss that underlies the northeast corner of Florence Junction quadrangle and all known areas of the Weavers Needle, Superstition SE, and Goldfield quadrangles. All of these rocks display a prominent foliation that is usually parallel to composition layering, and which reveals itself as a fabric parallel to the limbs of isoclinal folds of bedding in the psammitic schists and quartzites.

Xpa **Pinal Schist, amphibolite**: Thin layers of fine-grained, dark green to black amphibolite, locally compositionally banded. Banding is defined by either thin (1 to 3 mm thick), quartz and feldspar-rich, epidotized leucosomes, or up to 2 meter-thick layers of dark gray-colored, thin-banded quartzites. Banding in quartzites is defined by very thin, red, green, or light-colored layers.

Xpc **Pinal Schist, calc-silicate schist and marble**: Thin layers of varicolored calcareous schists, and rare marbles, generally associated with fairly broad zones of dark green, fine-grained amphibolitic(?) schist or phyllite.

Xpq **Pinal Schist, quartzite**: Dark blueish-gray colored, banded quartzite. Mapped separately only in the Milk Ranch area. This lithology also occurs within some foliated amphibolite units (Xa) in the southeastern Goldfield quadrangle.

Xgf **foliated granitoid**: Strongly foliated (probably tectonic) granitoids ranging in composition from diorite to granite, typically rich in biotite.

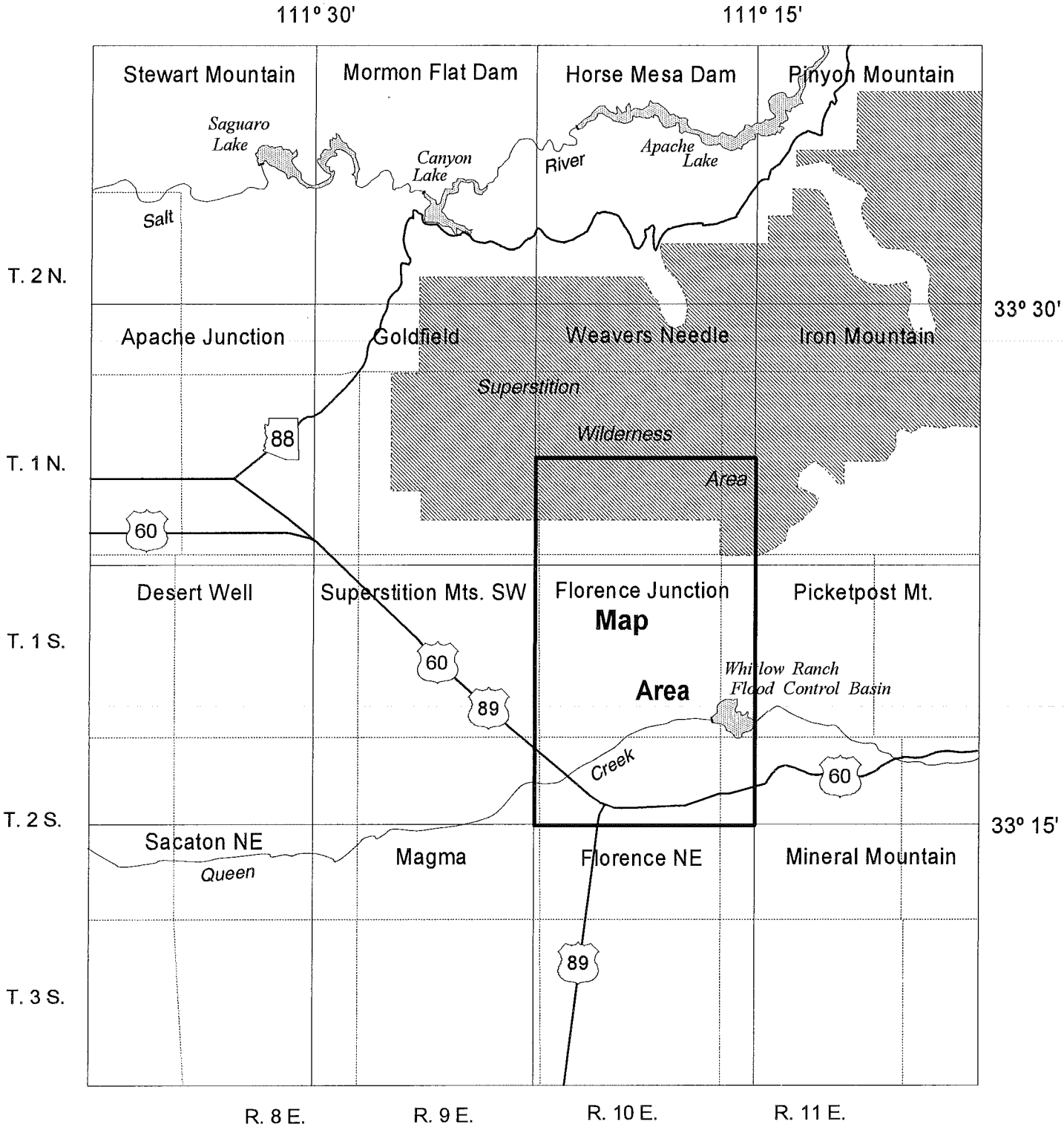
111° 30'
111° 15'
Stewart Mountain
Mormon Flat Dam
Horse Mesa Dam
Pinyon Mountain
Saguaro Lake
Canyon Lake
Apache Lake
Salt
River
T. 2 N.
33° 30'
Apache Junction
Goldfield
Weavers Needle
Iron Mountain
Superstition
Wilderness
Area
88
T. 1 N.
60
Desert Well
Superstition Mts. SW
Florence Junction
Picketpost Mt.
Map
Area
T. 1 S.
60
89
Whitlow Ranch
Flood Control Basin
Creek
60
T. 2 S.
33° 15'
Sacaton NE
Magma
Florence NE
Mineral Mountain
Queen
89
T. 3 S.
R. 8 E.
R. 9 E.
R. 10 E.
R. 11 E.

Fig. 1

STRATIGRAPHIC CORRELATION DIAGRAM

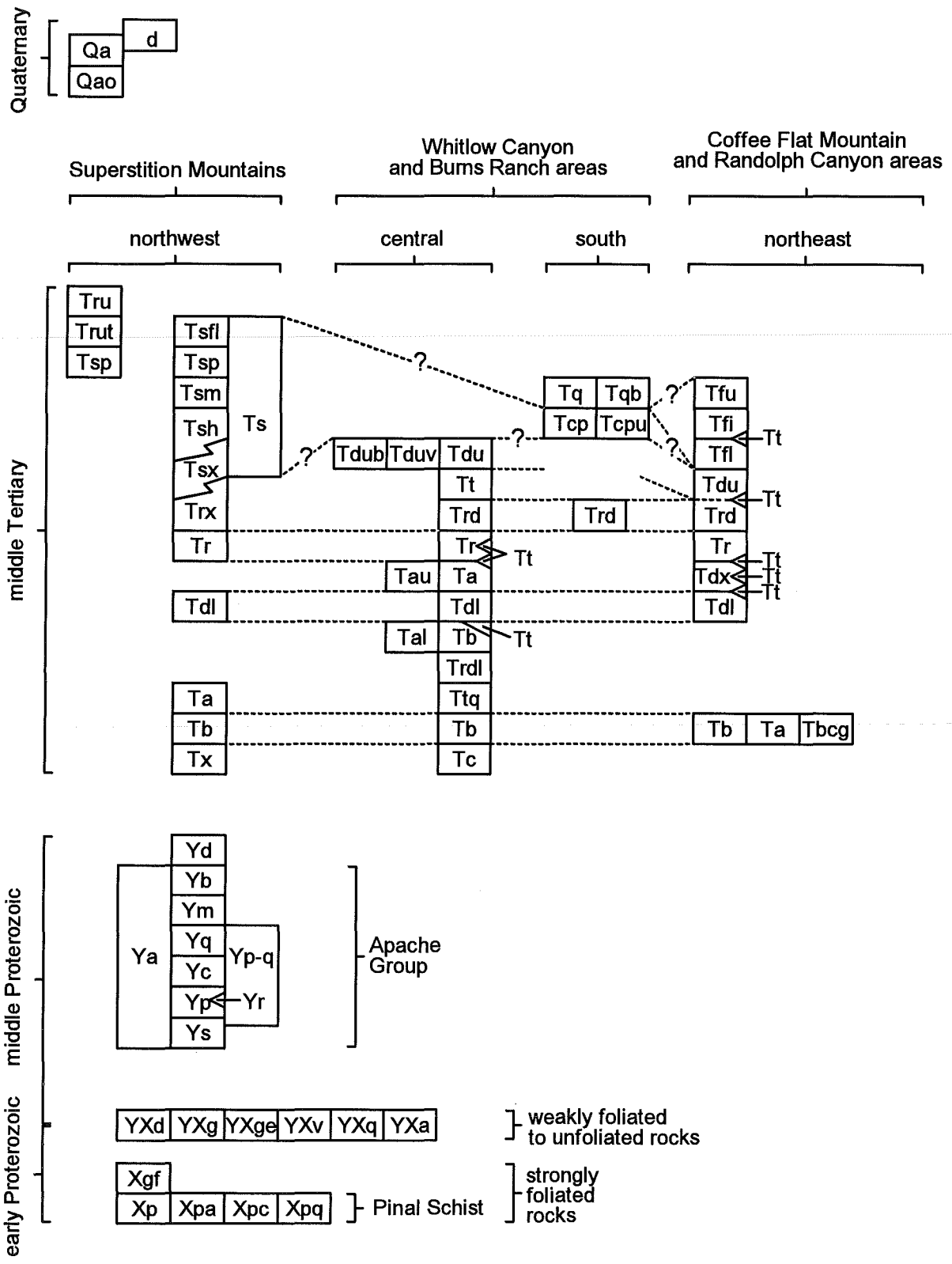

Figure 2

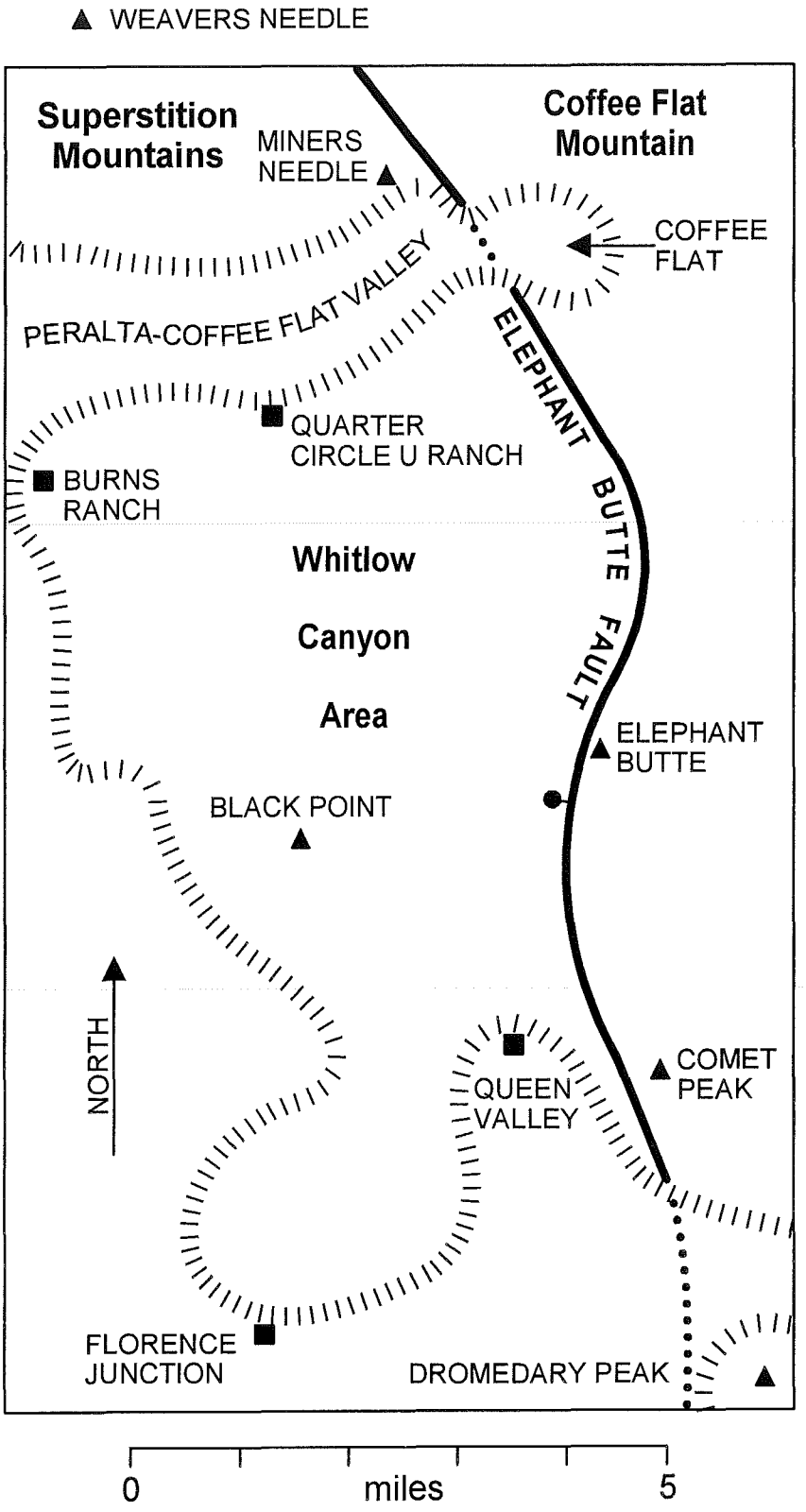

Figure 3. Physiographic map showing the Elephant Butte fault and place names of the study area used in this report.

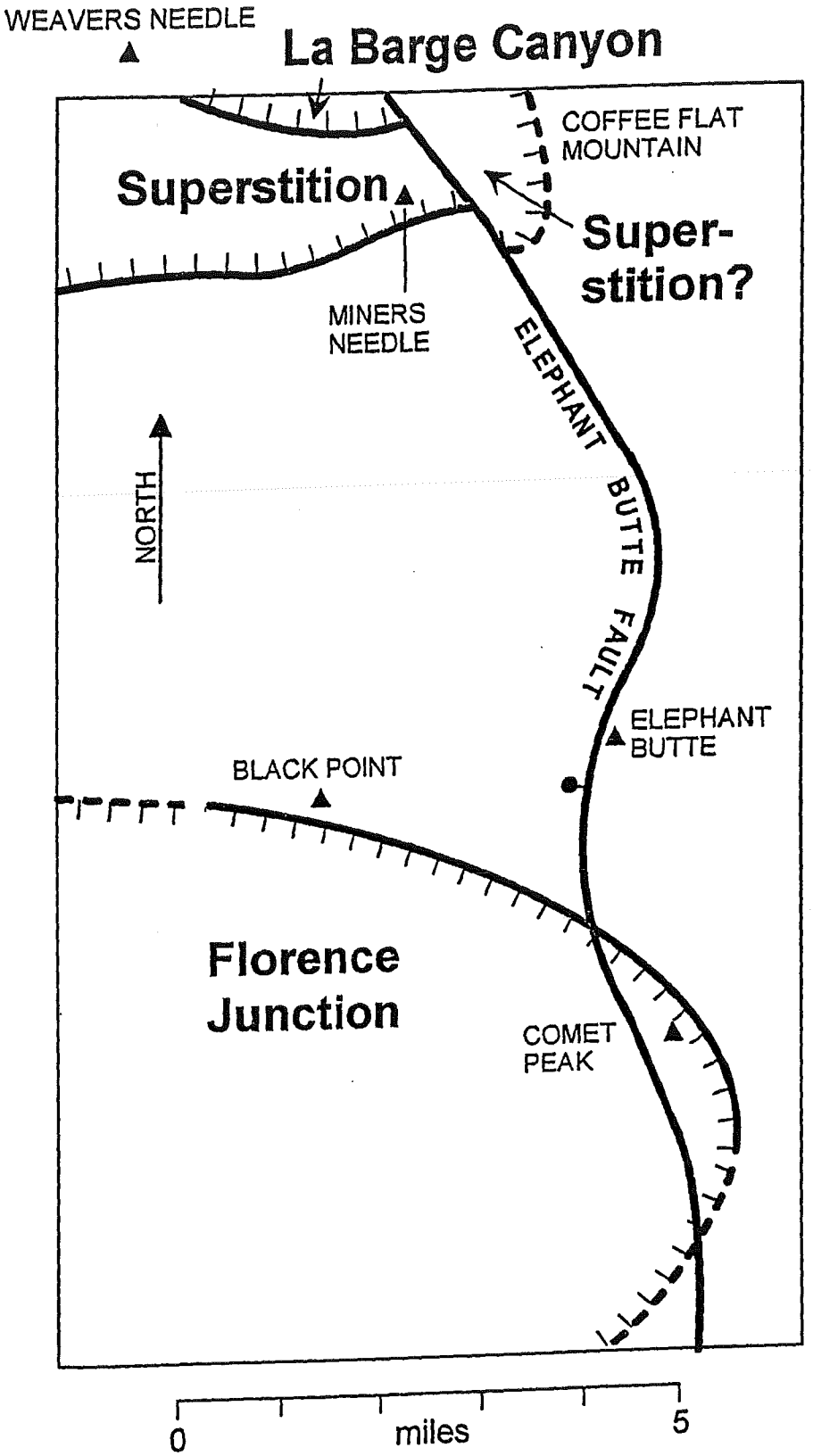

Figure 4. Approximate location of three volcano-tectonic depressions; Superstition, La Barge Canyon, and Florence Junction cauldrons.

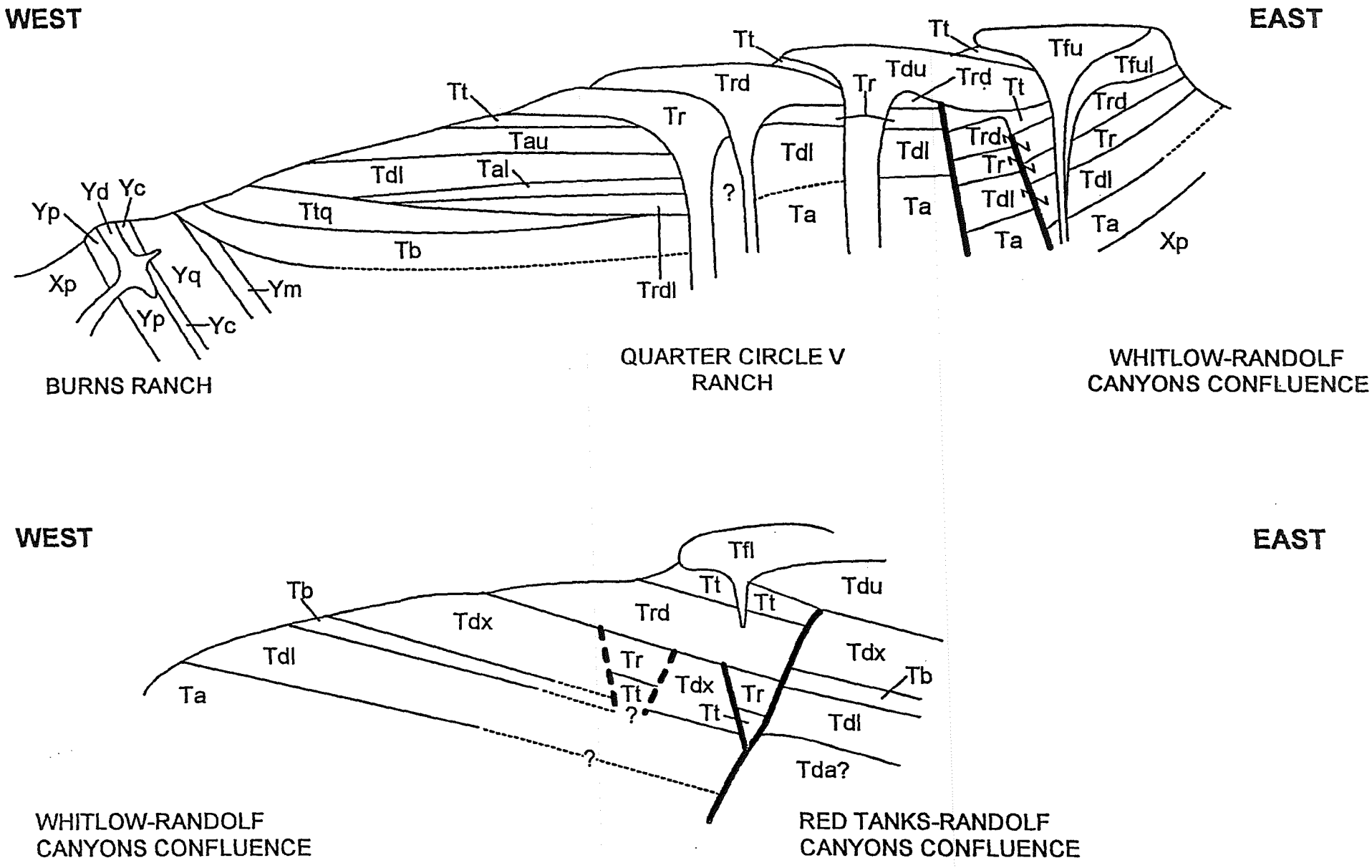

Figure 5. East-west stratigraphic correlation diagram of the northern Whitlow Canyon area that is divided into two segments at the west-side-down Elephant Butte fault, which runs through the confluence of Whitlow and Randolf canyons.

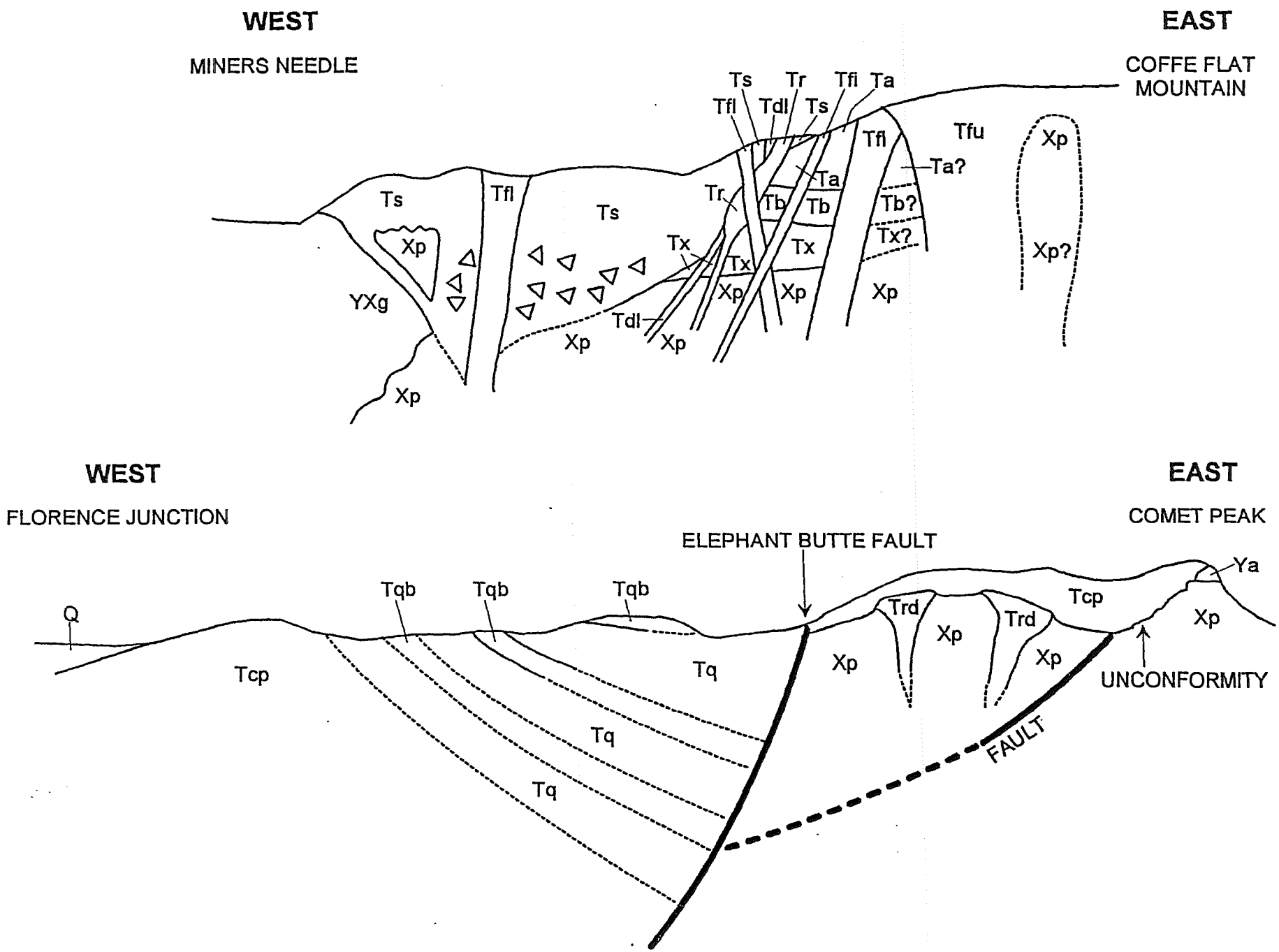

Figure 6. Stratigraphic correlation diagrams showing relationships across the Elephant Butte fault zone at the northern (upper) and southern (lower) edges of the study area.