THE USE OF COMPRESSED AIR IN SMALL MINES

by

HARRY E. KRUMLAUF, Professor of Mining Engineering
College of Mines, University of Arizona, Tucson, Arizona

THE ARIZONA BUREAU OF MINES

Bulletin 172

1963

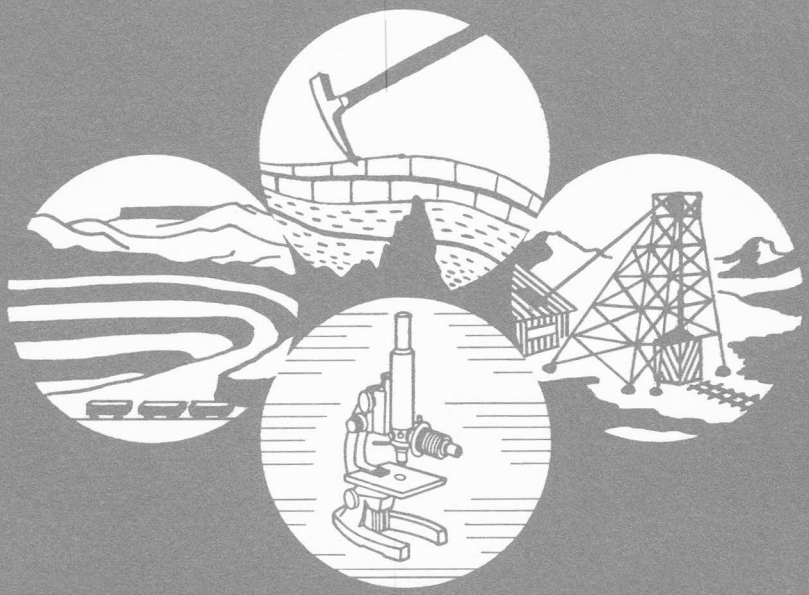

THE UNIVERSITY OF ARIZONA PRESS TUCSON

PRICE FIFTY CENTS

Free to residents of Arizona

THE USE OF COMPRESSED AIR IN SMALL MINES

by

HARRY E. KRUMLAUF, Professor of Mining Engineering
College of Mines, University of Arizona, Tucson, Arizona

THE ARIZONA BUREAU OF MINES

Bulletin 172

1963

THE UNIVERSITY OF ARIZONA PRESS TUCSON

COPYRIGHT © 1963
The Board of Regents of the Universities and
State College of Arizona. All rights reserved.

TABLE OF CONTENTS

	Page
INTRODUCTION	1
CHARACTERISTICS OF COMPRESSED AIR	2
THE COMPRESSED AIR SYSTEM	3
The Compressor	3
The Receiver	4
The Distribution System	4
Air Tools	5
Accessories	6
DESIGNING THE COMPRESSED AIR SYSTEM	6
Determination of Air Requirements	6
Selecting the Air Compressor	10
The Distribution System	15
THE COMPLETE COMPRESSED AIR SYSTEM	22
APPENDIX	27

LIST OF TABLES

Table		
1.	Standard Air Receivers	5
2.	Air Requirements of Representative Drilling Machines	7
3.	Air Requirements of Representative Small Air-Hoists	7
4.	Multipliers to Determine Air Consumption of any Single Air Tool at Various Elevations above Sea Level	9
5.	Multipliers to Determine Air Consumption of Rock Drills for Various Numbers of Drills	9
6.	Manufacturer's Rating of Portable Compressors	11
7.	Pipe Size – 80 to 125 p.s.i. gage	16
8.	Air Pressure Loss Due to Friction in Pipe	17
9.	Wholesale Cost of Pipe in Small Lots	18
10.	Loss of Pressure Through Screw Pipe Fittings	18
11.	Friction of Air in Hose	19
12.	Cost of Air Line Leaks	22
13.	Atmospheric Pressure vs. Elevation	29

LIST OF ILLUSTRATIONS

Figure		
1.	The rotary sliding-vane compressor	5
2.	Sketch of mine and compressed air system used in Problem 10	23

INTRODUCTION

Compressed air is a very important source of power in nearly all mines. In fact, no real substitute has been found for compressed air as a source of power for drilling holes for blasting in underground mining. Moreover, compressed air is used for many other purposes in and around the mine. Mucking machines, scraper-hoists, and ventilation fans are but a few of the machines commonly operated by compressed air.

In most mines compressed air is supplied by one or more compressors and delivered to the drilling machines at the working face through a distribution system of pipes and hoses. What happens to the compressed air as it passes through the distribution system on its way to the drilling machine is rarely determined by the small mine operator; he rarely knows whether or not the compressed air arrives at the machine under the pressure recommended by the drilling machine manufacturer. Instead, he tends to be satisfied if the drilling machine will drill a hole.

Drilling holes for blasting, however, is a major cost item in mining, and excessive costs for this part of the operation may mean the difference between profit and loss. For example, if one-half of a working day is required to drill a round when the drilling machine is operated at its recommended air pressure, then a pressure drop of 15 per cent at the machine will require that up to three-fourths of a day be used to drill the same round, and labor costs will be increased by about 50 per cent. It costs but a few cents to produce one horse-power of work energy with a compressor, but each man-hour lost because of low air pressure will cost at least $2.00, and probably more.

With these facts in mind, the following material is presented to give the non-technical mine operator an understanding of the proper use of compressed air. This material has been drawn from a large number of sources, none of which is complete and useable by the small mine operator. In fact, it was because this information was so widely scattered through books, trade literature, and engineering publications that this bulletin was written.

While much of the material presented here is based upon both theoretical and applied physics, mechanics, and mathematics, the results of investigations in these sciences are available in easily understood tables. These tables and numerous problems using the tables are given to demonstrate the methods used in determining compressor size

and proper pipe and hose sizes for the compressed air distribution system. Since the table values are mostly multiplying factors, their use does not require a knowledge of mathematics other than simple arithmetic. However, for the benefit of the reader who wishes to gain a broader understanding of the subject, the methods by which most of the table values were obtained are shown in a latter part of this paper.

The author wishes to acknowledge the help and information furnished by Mr. N. M. Fishback, of the Gardner-Denver Company, and Mr. F. P. Anderson, of the Compressed Air Institute; and also the efforts of Mr. Richard T. Moore, of the Arizona Bureau of Mines, who edited the manuscript.

CHARACTERISTICS OF COMPRESSED AIR

Air is a mixture of several gases, and this gaseous mixture obeys certain general rules in its behavior. In order to use compressed air intelligently, it is necessary to understand these rules.

The quantity of a gas that can be put into a container of fixed volume is not constant as it is with solids and liquids. Instead, it depends upon the pressure that is exerted upon the gas; the greater the pressure, the greater the quantity of gas that can be forced into the container. Stated another way, for a given quantity of gas, the greater the pressure applied to it the smaller the volume it will occupy. From these observations we see that the conditions of pressure and volume are related. When the pressure is decreased, the volume increases, and if the pressure is increased, the volume will be decreased. In the latter case, the gas, or air, is said to be compressed.

As anyone who has operated a hand air-pump will agree, it requires energy to compress air, and the more it is compressed, the greater the amount of energy required. Most of this energy is stored in the compressed air, and it is this energy that is used to perform work when the compressed air is allowed to expand in the air operated tool. The dependency of the amount of useable energy, stored in the compressed air, upon the pressure and volume changes occurring makes it possible to design and rate compressors and air tools on the basis of pressure and volume. In the United States the units of measurement for these quantities are pounds-per-square-inch (abbreviated p.s.i.) of pressure and cubic-feet-per-minute (abbreviated c.f.m.) of volume.

Absolute pressure. In all computations involving pressure in compressed air systems, absolute pressures are used. Absolute pressure is measured in pounds-per-square-inch-absolute (abbreviated p.s.i.a.) on a scale on which zero represents a theoretically perfect vacuum. Absolute pressure also is used in measuring the pressure of the atmosphere.

Atmospheric pressure. Atmospheric pressure is the pressure of the air around us. It is equal to the weight of a column of air one square-inch in cross section and extending upward from the elevation of measurement to outer space. At sea level, when the temperature is at 32 degrees Fahrenheit, the atmospheric pressure is 14.7 p.s.i.a. and this is called Standard or Normal Atmospheric pressure. Atmospheric pressure decreases with an increase in elevation above sea level. At 10,000 feet above sea level, for example, the atmospheric pressure is only 10.1 p.s.i.a.

Gage pressure. In the actual measurement of pressure, the gages used only measure pressure differences such as the difference between the pressure in a container and the local atmospheric pressure outside the container. This is called gage pressure and is measured in pounds-per-square-inch-gage (abbreviated p.s.i.g.). To obtain the absolute pressure in the container the gage pressure would be added to the local atmospheric pressure.

In discussing air under the different conditions encountered in compressed air systems, special names are used:

Free air. Free air is air under the usual atmospheric conditions for the given location and elevation. It is subject to changes caused by variations in weather conditions. For all practical purposes, free air may be considered as the air on the intake side of the compressor at the elevation of the compressor.

Normal air. Normal air is a special name applied to free air under average sea-level conditions. Normal-air conditions are used to arrive at an average figure from which the output, operating characteristics, and efficiencies of compressors may be computed. In the tables that follow, the volume of air delivered by compressors and the air consumed by machines is considered to be normal air.

Compressed air. Compressed air is free air that has been reduced in volume by the action of a compressor. The free air is taken into the machine, compressed, and forced into a container, where it occupies a smaller space than it did before entering the compressor.

THE COMPRESSED AIR SYSTEM

The compressed air system is made up of four principal parts; the compressor, receiver, distribution system and the air-operated machine. Several accessories, such as line oilers and unloaders, are also frequently included in the system.

THE COMPRESSOR

Compressors are machines that take free air under atmospheric pressure at the intake and compress it to a high discharge pressure. The

discharge pressure must be high enough to overcome the friction in the distribution system of pipes and hoses and deliver the compressed air to the machines at the pressure, recommended by their manufacturers, for most efficient operation.

Compressors used at mines are of positive-displacement types. The most common is the reciprocating compressor, in which the air is compressed by a piston in a cylinder.

A second type of positive-displacement compressor employs rotary sliding vanes. In this machine (Fig. 1), a rotor is mounted off-center (eccentrically) in a cylinder. Sliding vanes are mounted in grooves in the rotor, parallel to the long axis of the rotor. Free air is trapped between two of the vanes and is compressed between the vanes, rotor, and cylinder wall as the rotor revolves in the cylinder.

Both types of compressor may be obtained in either portable or stationary models. Portable models are mounted either on wheels or skids, whereas the stationary models, designed primarily for long use at one location, are mounted on concrete foundations.

THE RECEIVER

The air receiver is a container or storage tank that is located in the distribution system between the compressor and the machines, usually near the discharge side of the compressor. It is used to store compressed air when the full capacity of the compressor is not being used, and also it gives a more nearly steady flow of air to the machines.

Most portable compressors are equipped with a small receiver that may be adequate for construction work but not adequate for use at a mine. Although no definite receiver size can be given as suitable for a specific mine, the American Society of Mechanical Engineers has compiled the data given in Table 1 as a guide to receiver size. The receiver volumes listed are about equal to the volume of compressed air discharged in one minute by the corresponding compressors. Such receivers will supply the mine over short periods of peak demand. Receivers of larger size may also be very helpful at times, and additional receivers placed in the mine near the working places may partially counteract the faults of a poorly designed distribution system.

All receivers should be equipped with a safety valve and a small drain valve at or near the bottom of the unit. Moisture that condenses in the receiver, as well as excess oil, can be blown off through this drain valve. This should be done once or twice each shift.

THE DISTRIBUTION SYSTEM

The distribution system consists of a line of pipes, valves, elbows, tees, and hoses that transmits the compressed air from the receiver to

Table 1. Standard Air Receivers*

Actual Comp. Capacity (c.f.m. of Free Air)	Receiver Size			Safety Valves	
	Diameter (Inches)	Length (Feet)	Volume (Cu. Ft.)	No.	Diameter (Inches)
60	14	4	4½	1	¾
95	18	6	11	1	1
185	24	6	19	1	1½
305	30	7	34	1	2
450	36	8	57	1	2½
640	42	10	96	1	3
1275	48	12	151	2	3
1900	54	14	223	3	3

*Adapted from the "Code for Air Receivers" as given by the American Society of Mechanical Engineers.

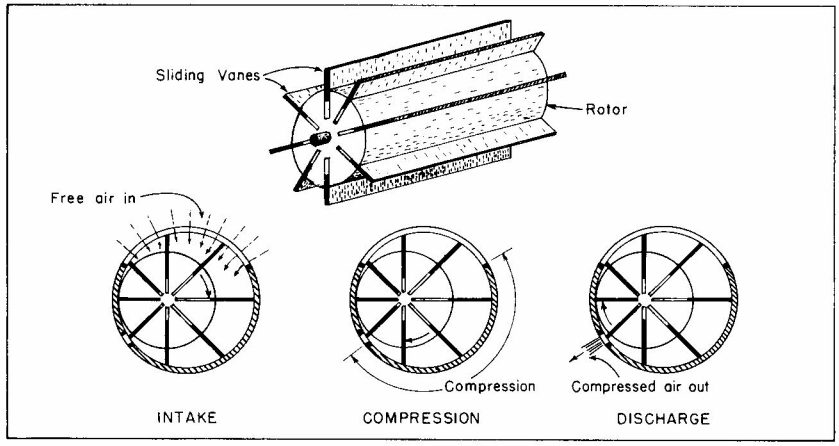

Fig. 1. The rotary sliding-vane compressor.

the machines in the mine. It is usually the least understood, the most poorly designed, and the most neglected part of the compressed air system.

A carefully planned distribution system, however, will give the operator full benefit of compressed air power. The distribution system should not be built from pipe and fittings merely because they are available at the property or because they are cheap, but only if such material fits properly into the completely designed system. It is not difficult to determine the proper sizes of pipe, type of fittings, and size and length of hose that will give the most satisfactory results and keep pressure losses well within the allowable limits.

AIR TOOLS

The air tools include drifters, stopers, mucking machines, air-hoists, air-scrapers, blowers, and several other machines.

The unloader. Most mine compressors run continuously, and the air pressure in the receiver, as well as the discharge pressure of the compressor, is controlled automatically by a device called an unloader. The unloader controls the pressure in the receiver within a range of from 6 to 10 p.s.i. As an example, if the unloader has a 6 p.s.i. range and a 100 p.s.i.g. maximum pressure is required, the unit will unload at 100 p.s.i.g. and, as air is used in the mine, the unit will cut back in at 94 p.s.i.g.

Moisture separator. In areas where the free air at the compressor intake is very humid a moisture separator or trap should be placed in the discharge line to remove condensed moisture. Generally, however, the moisture separator is unnecessary, as most of the moisture is trapped in the receiver or the distribution lines.

Line Oiler. All air-driven machines, especially rock drills, should be provided with a lubricating device, called a line oiler. The line oiler is commonly cut into the air hose some 10 or 12 feet from drilling machines or fastened to the frames of mucking machines or air-hoists. Some operators believe that line oilers require a relatively large amount of power for their operation and that low pressure at the machine is due in part to the oiler. This belief, however, is not founded on facts, as the power used by the oiler is not measurable by ordinary means.

DESIGNING THE COMPRESSED AIR SYSTEM

The problem of designing a compressed air system may be divided into three basic parts: 1) Determining the amount of air required to operate the tools to be used, 2) selecting compressor capacity sufficient to supply the required quantity of air, and 3) selecting the proper sized components for the distribution system such that it will transmit the air to the tools without excessive pressure loss.

DETERMINATION OF AIR REQUIREMENTS

The amount of compressed air required to insure an efficient operation will depend upon the number and types of machines that will be used in the mine; this matter is a general mining problem and will not be discussed here. Once the machines have been selected, however, the determination of air requirements is relatively simple.

Drilling Machines. Most drilling machines are designed to operate efficiently at a pressure of from 90 to 95 p.s.i.g. Table 2 gives the approximate amount of free air used by drills of various sizes when operated with compressed air at a pressure of 90 p.s.i.g. at sea level.

The amount of air used by the machines listed in Table 2 will vary somewhat from the values shown, depending upon the stroke of the

Table 2. Air Requirements of Representative Drilling Machines.

Type	Hammer Diameter (inches)	Weight of Machine (lbs.)	Free Air Required (c.f.m.)
Sinker†	2-3/8	30*	70
"	2-1/2	50*	95
"	2-5/8	60*	110
"	2-3/4	70*	115
Stoper	2-9/16	100	140
"	2-3/4	120	160
Drifter	2-3/4	80*	130
"	3	90*	140
"	3-1/2	110*	180
"	4-1/2	170*	200

† The sinker type of drill, when provided with a special adapter, may be equipped with an air-feed leg and used for drifting and stoping.
* Mounting is not included in the weight.

Table 3. Air Requirements of Representative Small Air-Hoists.

Drum Diam. (inches)	Load in lbs. (Rope Pull)	Speed (Ft. per Min.)	Normal Air* (c.f.m. @ 100 p.s.i.g.)	Horse Power
4½	500	75	70	1.1
"	1000	52	60	1.5
"	1500	30	45	1.4
5½	1000	140	200	4.2
"	1500	120	190	5.7
"	2000	100	170	6.0
"	2500	80	155	6.0
"	3000	60	135	5.7
7	2000	180	350	11.0
"	2500	160	325	11.8
"	3000	140	300	12.0
"	4000	80	220	10.5
10	1500	240	350	10.5
"	2000	200	340	11.6
"	2500	160	320	11.7
"	3000	120	275	10.7

* This table was obtained from air-hoist curves that were determined for 100 p.s.i.g. air pressure. Curves for 90 p.s.i.g. were not available.

hammer, drill rotation, types of steel and size of bit. The values given, however, are average values and are well within the limits of accuracy necessary to determine the required compressor capacity.

Mucking Machines. Because of the high cost of labor, it is usually more economical to drive drifts and cross-cuts using a mucking machine to load the broken rock than to pay laborers to do this job. The smallest size of track-mounted mucking machine is adequate for this job. The maximum air demand at 100 p.s.i.g. by this machine is 500 c.f.m. of normal air and occurs when tramming the short distance back from

the muck pile with a full bucket to discharge into the mine car. This period of maximum demand is for only a few seconds and can be met by adequate receiver storage capacity. The average air consumption by this machine is less than 300 c.f.m., and a compressor with a capacity of 315 c.f.m. would be large enough. However, the receiver should have a volume of at least 40 cubic feet (Table 1) to carry the peak load.

Air-hoists. The amount of compressed air required for hoisting varies with the load to be hoisted and the speed of hoisting. Table 3 gives the approximate amount of air consumed by hoists and slushers of different rope speeds and rope pulls at 100 p.s.i.g. The list of hoists given in Table 3 is not complete, as a given manufacturer will build several models of hoists with the same drum diameter. Each model is designed for some particular purpose. However, the values shown are within the limits of accuracy needed to determine compressor capacity for a small mine using a small air-hoist.

Problem 1.

An inside vertical shaft in a small mine is to be equipped with an air hoist. What size hoist should be selected if the weight of ore, skip, and cable is 3000 pounds? From Table 3, a hoist with a 5½-, 7-, or 10-inch drum could be used. The controlling factor for this problem is either speed of hoisting or amount of compressor capacity available.

Solution A:

If a limited amount of compressed air is available, as may be the case for an exploratory shaft, a hoist with a 5½-inch drum would be selected. The hoisting speed would be 60 feet per minute and the machine would use 135 c.f.m. of normal air.

Solution B:

If speed were the important factor, a hoist with a 7-inch drum would be selected. The speed of hoisting would be 140 feet per minute, and the machine would use 300 c.f.m. of normal air, more than twice the amount used by the hoist with the 5½-inch drum.

Larger air-driven hoists than those listed in Table 3 are available, but the small mine probably would not have the compressed air capacity necessary to operate one. Furthermore, the operation of large hoists by compressed air is no longer considered to be economical. As the production of the mine is increased, electrically driven hoists should be installed.

Corrections for Elevation Above Sea Level. Tables 2 and 3 give the c.f.m. of normal air consumed by various tools. As explained previously, however, the quantity of air actually contained in a cubic foot of free air decreases with increased elevation above sea level. Therefore, as the quantity of compressed air required to operate the machines remains constant, the number of c.f.m. of free air required increases with increased elevation. Table 4 gives the multiplying factors by which the c.f.m. of free air required at various elevations above sea level can be determined.

Table 4. Multipliers to Determine Air Consumption of any Single Air Tool At Various Elevations above Sea Level.

Elevation above Sea Level (Feet)	Multiplier	Elevation above Sea Level (Feet)	Multiplier
0	1.00	7000	1.27
1000	1.03	8000	1.30
2000	1.06	9000	1.35
3000	1.10	10000	1.39
4000	1.14	11000	1.45
5000	1.18	12000	1.52
6000	1.22	13000	1.56

Although air consumption at different altitudes will also vary with the construction of the tool, the multiplying factors of Table 4, when used with the values in Table 2 or 3, will give results of sufficient accuracy for most small mining applications.

Problem 2.

From Table 2, a 2¾-inch stoper will consume at sea level 160 c.f.m. of free air. How much free air at an elevation of 5000 feet above sea level will this machine consume?

Solution:

Multiplier from Table 4 for 5000 feet is 1.18. Therefore, 160 x 1.18 = 189 c.f.m. of free air needed at 5000 feet.

Experience shows that very rarely are all the available air-operated tools in a mine used at one time. Therefore, the total quantity of air required is not the sum of the requirements of each tool but will be some quantity less than that amount. On the basis of probability data, multiplier factors have been developed by which the air requirements can be determined for various numbers of drills. These factors can in

Table 5. Multipliers to Determine Air Consumption of Rock Drills for Various Numbers of Drills.*

Elevation (Feet)	Number of Drills									
	1	2	3	4	5	6	7	8	9	10
	Multiplier									
0	1.0	1.8	2.7	3.4	4.1	4.8	5.4	6.0	6.5	7.1
1000	1.0	1.9	2.8	3.5	4.2	4.9	5.6	6.2	6.7	7.3
2000	1.1	1.9	2.9	3.6	4.4	5.1	5.8	6.4	7.0	7.6
3000	1.1	2.0	3.0	3.7	4.5	5.3	5.9	6.6	7.2	7.8
4000	1.1	2.1	3.1	3.9	4.7	5.5	6.1	6.8	7.4	8.1
5000	1.2	2.1	3.2	4.0	4.8	5.6	6.3	7.0	7.6	8.3
6000	1.2	2.2	3.2	4.1	4.9	5.8	6.5	7.2	7.8	8.5
7000	1.2	2.2	3.3	4.2	5.0	5.9	6.6	7.4	8.0	8.7
8000	1.3	2.3	3.4	4.3	5.2	6.1	6.8	7.6	8.2	9.0
9000	1.3	2.3	3.5	4.4	5.3	6.2	7.0	7.7	8.4	9.2
10000	1.3	2.4	3.6	4.5	5.4	6.3	7.1	7.9	8.6	9.4

* From "Compressed Air Data," Published by Compressed Air and Gas Institute, 112 East 42nd Street, New York 17, N. Y.

turn be combined with the elevation factors of Table 4 so that the corrections for elevation and number of tools can be made in one step. These combined factors are given in Table 5.

Problem 3.

What will be the air requirements for two 3½-in. drifters at sea level? 2000 feet?

Solution:

From Table 2 it is found that a 3½-in. drifter uses 180 c.f.m. of free air at sea level.

Although two drifters could be in operation at the same moment, it is not probable that they will be in continuous full operation at all times. Changing steel and bits, collaring holes, and changing setup will take 50 per cent or more of the drilling time. This probability is expressed in the multiplying factors shown in Table 5, together with the correction for elevations above sea level. For the above two drifters, the amount of air used at sea level would be:

1.8×180 c.f.m. $= 324$ c.f.m. required and not

$2 \times 180 = 360$ c.f.m. as first might be expected.

At 2000 feet the multiplier for two tools is 1.9, therefore:

$1.9 \times 180 = 342$ c.f.m. of free air required.

Problem 4.

A small mine is located at 5000 feet above sea level and is producing 25 tons per shift with the following air tools:

- 2 sinker type drills, 2⅝-in. size, that use at sea level 110 c.f.m. of free air each (Table 2).
- 2 stopers, 2-9/16-in. size, that use 140 c.f.m. of free air at sea level each (Table 2).
- 1 small track-mounted mucking machine using 300 c.f.m. of free air at sea level (page 7).

The sinker type drills, used as air-leg machines, will be used to drive drifts and crosscuts and, without the air-leg mounting, for sinking shafts and winzes. The mucking machine will be used in the drifts and crosscuts. The stopers will be used for stoping and raising operations. Since the air-leg machine and the mucking machine will not be able to operate in the same heading at the same time, not more than one air-leg machine can be in operation while the mucking machine is being operated. Therefore, the air requirements of 1 air-leg machine, 1 mucker, and 2 stopers must be determined.

Solution:

To determine the volume of free air necessary to operate these tools the multipliers for 5000 feet elevation (Table 5), the sea level requirements of the drills (Table 2), and the 300 c.f.m. requirement of the mucker (page 7) will be used:

1 sinker (Air-leg machine) at 110 c.f.m.:	$1.2 \times 110 = 132$ c.f.m.
1 mucking machine at 300 c.f.m.:	$1.2 \times 300 = 360$ c.f.m.
2 stopers at 140 c.f.m.:	$2.1 \times 140 = 294$ c.f.m.
	Total = 786 c.f.m.

Therefore, a total of 786 c.f.m. of free air will be required to operate the tools at an elevation of 5000 feet.

SELECTING THE AIR COMPRESSOR

After the volume of free air required to operate the various tools to be used has been determined, it is next necessary to select the proper size compressor to supply these needs.

The type of compressor chosen by the mine operator, whether it be the reciprocating type or the rotary sliding-vane type, will be a personal one or perhaps be dictated by the type available in the district. Both types of machines have had years of proven service and either type will be satisfactory.

The operator will also be faced with a choice between a gasoline or Diesel power unit to drive the compressor. The choice will be one of economy of operation. The cost of fuel to operate a Diesel engine of a given horse power will be substantially less than the cost of fuel to operate a gasoline engine of the same horse power. Life of the unit and cost of repairs are also in favor of the Diesel engine. The purchase price of a Diesel power unit, however, will be substantially more than that of a gasoline-driven unit of the same size.

Small size air compressors, adequate for small mining operations, are also available with electric-motor power units. If a public service power line is near the mine location, the operator should consider the possibility of using an electric-motor driven compressor.

In most types of compressors used in mining the free air is compressed from atmospheric pressure to an intermediate pressure in one stage, and then is discharged into an intercooler. The intercooler removes the heat generated by the first stage of compression, and the air at this intermediate pressure is then taken into a second or high-pressure stage, where it is compressed to the desired discharge pressure. Since most air-operated mining equipment performs best at a pressure of about 90 p.s.i.g., the compressor should be capable of delivering air to the receiver at a pressure between 95 and 105 p.s.i.g.

The capacity of a compressor is based upon the volume of free air that is compressed by the low-pressure stage and not the volume of compressed air that is discharged from the high-pressure stage. The capacity of the high-pressure stage is designed by the manufacturer to handle the volume of air discharged by the low-pressure stage.

Table 6. Manufacturer's Rating of Portable Compressors.

Reciprocating	Rotary Sliding-Vane
60 c.f.m.	85 c.f.m.
105 "	125 "
160 "	210 "
210 "	315 "
315 "	365 "
420 "	600 "
500 "	900 "

Portable Compressors. Most small compressors are set to deliver compressed air at a pressure of about 100 p.s.i.g. and are rated according to their capacity in c.f.m. of free air delivered. Table 6 lists the various

sizes of portable compressors, both piston and rotary type, that are commonly available.

Most of the compressors listed in Table 6 are available with either gasoline or Diesel engine power units. Skid-mounted and stationary compressors of similar capacity are also available with electric-motor power units.

Stationary Compressors. Compressors that are mounted on permanent foundations are called stationary compressors and are usually of the reciprocating type. They are designed for long years of service in one location. The manufacturers provide drawings and other information for the proper construction of the foundation.

The stationary compressor is basically similar in design to the portable type but is usually much more sturdily constructed. Some compressors of small capacity and all large-capacity compressors are stationary types. The small stationary compressors are single-acting, that is, the air is compressed only on the forward stroke of the piston. The larger types are usually double-acting machines in which the air is compressed on both the forward and backward stroke of the piston, and these have the approximate capacity of two single-acting pistons.

Unlike the portable type of compressor, the manufacturers do not give the capacity of stationary compressors in c.f.m. of free air compressed but rate the compressors on the basis of piston displacement. The term "piston displacement" means the actual amount of space the piston passes through during the compression part of the stroke for a given length of time, usually one minute. Piston displacement is equal to the number of compression strokes per minute times the length of the stroke times the area of the piston face. The manufacturers also give the diameter of the cylinders, the stroke, and the recommended speed in revolutions per minute. With this information, the piston displacement can be found by solving either the equation:

$$V = RPM \times S \times A$$

or the equation:

$$V = RPM \times S \times 0.785D^2$$

where:

V = piston displacement in c.f.m.,
RPM = revolutions per minute,
S = stroke in feet,
$A = 0.785D^2$ = area of piston in square feet*, and
D = diameter of piston in feet.

*The term $0.785D^2$ is obtained by combining the constants π (= 3.1416) and 4 in the formula for the area of a circle: $A = \frac{\pi D^2}{4} = 0.785D^2$.

Problem 5.

Assume a compressor cylinder is 10-inches in diameter, the stroke of the piston is 9-inches, the recommended speed is 360 RPM, and the piston is single-acting (compression on forward stroke only). What is the piston displacement in c.f.m.?

Solution:

Substituting the numerical values in the above equation:

$$\begin{aligned} V &= RPM \times S \times 0.785D^2 \\ &= 360 \times \frac{9}{12} \times 0.785 \times \frac{10}{12} \times \frac{10}{12} \\ &= 147 \text{ c.f.m.} \end{aligned}$$

(Note that the equations call for dimensions in feet. Therefore, the values "9-inches" and "10-inches" are converted to $\frac{9}{12}$ and $\frac{10}{12}$ feet, respectively).

In the case of a double-acting compressor the displacement must also be computed for the return stroke, and the total displacement is then equal to the sum of the displacements on the forward and return strokes. The displacement on the return stroke, however, is not equal to that on the forward stroke because the piston rod reduces the volume of the cylinder on the reverse stroke.

Problem 6.

Assume that the compressor in Problem 5 is double-acting and that the diameter of the piston rod equals 2-inches. What is the total displacement in c.f.m.?

Solution:

The displacement on the forward stroke equals 147 c.f.m., as determined in Problem 5. The effective area of the piston on the return stroke, however, is reduced by the cross-sectional area of the piston rod, or:

$$\begin{aligned} A &= 0.785D^2 - 0.785d^2 \\ &= 0.785\,(D^2 - d^2) \end{aligned}$$

where:

D = diameter of piston, as before, and
d = diameter of piston rod.

Substituting the numerical values in this formula:

$$\begin{aligned} A &= 0.785 \left[\left(\frac{10}{12}\right)^2 - \left(\frac{2}{12}\right)^2 \right] \\ &= 0.785 \left(\frac{100}{144} - \frac{4}{144} \right) \\ &= 0.523 \text{ square feet.} \end{aligned}$$

Using this value for the effective area of the piston in the displacement formula:

$$\begin{aligned} V &= RPM \times S \times A \\ &= 360 \times \frac{9}{12} \times 0.523 \\ &= 141 \text{ c.f.m.} \end{aligned}$$

Therefore, the piston displacement on the return stroke is 141 c.f.m. Combining the displacements on the forward and return strokes, the total displacement is:

$$147 + 141 = 288 \text{ c.f.m.}$$

The usual procedure in the case of a double-acting compressor, however, is to deduct one-half the area of the piston rod from the area of the piston:

$$A = 0.785D^2 - \frac{0.785d^2}{2}$$
$$= 0.785\left(D^2 - \frac{d^2}{2}\right)$$

Substituting the numerical values given above in this formula:

$$A = 0.785\left(\frac{100}{144} - \frac{4}{288}\right)$$
$$= 0.534 \text{ square feet.}$$

This is called the effective area of the piston for the problem. The total displacement is then found by using this value in the displacement formula and multiplying by 2:

$$V = RPM \times S \times A \times 2$$
$$= 360 \times 0.75 \times 0.534 \times 2$$
$$= 288 \text{ c.f.m., as before.}$$

In Problems 5 and 6 the total mechanical displacement per minute of the piston was determined. This, however, is not the actual amount of free air that the machine will compress in one minute. The actual amount of free air delivered by the machine is always less than the piston displacement because no compressor is 100 per cent efficient.

The most important factors in reducing the capacity of a compressor are mechanical ones. In addition to the loss that always occurs through leakage around the valves and past the piston, space must be allowed between the cylinder head and the piston at the end of its travel. Also, some space is allowed for valves and valve ports. For the smaller sizes of compressors commonly used in small mines, the clearance space is equal to 2 to 6 per cent of the actual piston displacement.

The compressed air that is trapped in the clearance space is not discharged at the end of the piston stroke but remains in the cylinder. This air then expands on the return stroke of the piston and the volume of incoming free air is reduced by an amount equal to the space occupied by this expanded air.

The ratio of the actual volume of free air delivered by the cylinder to the computed piston displacement is called the volumetric efficiency. Small two-stage compressors have a volumetric efficiency of from 75 to 85 per cent, and for the larger sizes the efficiency will range from 80 to 90 per cent. The actual free air that is compressed by a stationary compressor can then be determined approximately by multiplying the piston displacement by the volumetric efficiency of the machine.

Since the volumetric displacement of a compressor is the same for any given speed, a compressor that will deliver, for example, 315 c.f.m. of free air at sea level will also deliver 315 c.f.m. of free air at any altitude above sea level. However, at higher elevations the atmospheric pressure is less than at sea level and the air is said to be rarefied, that is,

it has a lesser density. Because of this condition, a compressor of larger capacity must be used to deliver a given volume of compressed air at the desired pressure at higher elevations than at sea level. This is the reason the correction for altitude must be made when determining the volume of free air required (see problem 3, page 10).

Transporting and Installing the Compressor. The compressor is usually purchased or rented from a local dealer. If the compressor is of the portable type, as is usually the case for small mines, it will be towed to the mine location. As most portable compressors are not equipped with brakes, the maximum safe towing speed is from 20 to 30 miles per hour. The operator should check with the State Police concerning State or local laws governing the use, weight, and methods of handling trailers.

In setting up the compressor, several important points must be observed. The compressor should be set level and in a place where the machine is easily accessible for servicing. It should be located near the shaft or adit where the air lines to the receiver and from there to the shaft or adit are as short as possible and with as few elbows as possible, as additional lengths of pipe and elbows increase the pressure losses in the distribution system. Of equal importance, the compressor intake must receive clean air, as dusty air seriously increases the cost of maintenance. Also, exhaust gases from the gasoline or Diesel engine of the power unit must not be taken into the mine ventilation system.

THE DISTRIBUTION SYSTEM

Low Air Pressure. In the preceding discussion the emphasis has been on the volume of air delivered to the machine. Of equal importance is the pressure of the air delivered. Most pneumatic tools, including drilling machines, are designed to operate most efficiently at a pressure of about 90 p.s.i.g. When operated at a pressure below the range of 85 to 90 p.s.i.g., the tool is not able to do the maximum work for which it was designed and it is said to be operating under "low air pressure."

The effects of low air pressure on the efficiency of pneumatic tools are tremendous. The Compressed Air and Gas Institute has determined that when the air pressure at a rock drill has been increased from 70 to 90 p.s.i.g, the drilling speed is increased by 41 per cent. A drilling machine using a short piece of steel will drill an up hole with a pressure at the machine as low as 65 p.s.i.g.; however, the time required to drill the hole will be three to five times as great as that required when the pressure at the machine is 90 p.s.i.g. It easily can be seen that a pressure drop of 35 p.s.i. that is, from 100 p.s.i.g. at the receiver to 65 p.s.i.g. at the drill, will cause a very substantial loss, not only in air pressure, but in labor, equipment, and supplies.

Inasmuch as only the pressure and volume of compressed air available at the point of use can be effective in doing work, it is of prime importance that pressure losses in the distribution system be kept at a minimum. In general practice, a pressure drop of 10 p.s.i. is considered the maximum allowable. This is equivalent to a drop from 100 p.s.i.g. at the receiver, the normal compressor setting, to 90 p.s.i.g. at the tool, the commonly recommended pressure for efficient operation.

Effects of Friction. For practical air distribution, the largest cause of pressure loss in the distribution system is friction. A great deal of research has been done on the factors affecting the flow of fluids and air in pipes; consequently the effects of friction are well understood and can be computed with reasonable accuracy.

The most important of the factors contributing to friction loss in the compressed air system are the diameter of the pipe used in the distribution system and the pressure differential driving the air. Inasmuch as the pressure differential is fixed within narrow limits by the operating pressure required at the tools and the economics of producing the compressed air at the compressor, the only factor that can be varied to control friction, and thus the pressure loss, is the diameter of the pipe used.

Selection of pipe. The use of small sizes of pipe and hose in the compressed air distribution system is a very serious cause of low air pressure. Pipes under 1¼-inches in inside diameter and air hoses less than 1-inch in inside diameter have no place in the mine compressed air distribution system. Any mine manager who uses undersized pipe and hose is using high-cost man power for low-cost compressed air power.

An estimate of minimum pipe sizes to be used in a single-line distribution system can be made using Table 7. A more accurate determination of the size of pipe to be used for transmission systems can be made by using Table 8.

Table 7. Pipe Size – 80 to 125 p.s.i. gage.*

Volume of Free Air To be Carried (c.f.m.)	Length of Line in Feet			
	50 to 200	200 to 500	500 to 1000	1000 to 2500
	Nominal Pipe Diameter in Inches			
60 to 100	1	1¼	1½	2
100 to 200	1¼	1½	2	2½
200 to 500	2	2½	3	3½
500 to 1000	2½	3	3½	4
1000 to 2000	3	4	4½	5

*Adapted from "Overpowered and Underworked" by Compressed Air and Gas Institute.

Table 8 gives the approximate loss of air pressure per 1000 feet of

pipe due to friction for different quantities of free air at 100 p.s.i.g. and for different sizes of pipe.

The pipe size shown is the nominal inside diameter of commercial pipes and not the actual diameter. For example, an ordinary 1½-inch pipe has an actual inside diameter of 1.61 inches, and a 2-inch pipe has an inside diameter of 2.06 inches. Although the values in Table 8 are given for the nominal diameters, the actual diameters of the pipes were used to derive the values in the table, and the reader need make no correction for the difference.

Table 8. Air pressure loss due to friction in p.s.i. per thousand feet of pipe. (Initial pressure of 100 p.s.i.g).*

Cubic Feet of Free Air Per Minute	Nominal Diameter of Pipe in Inches									
	1¼	1½	2	2½	3	3½	4	4½	5	6
	Pressure Loss in p.s.i. per 1000 feet									
60	2.32	1.02	0.28							
70	3.16	1.40	0.37							
80	4.14	1.83	0.49	0.19						
90	5.23	2.32	0.62	0.24						
100	6.47	2.86	0.77	0.30						
125	10.2	4.49	1.19	0.46						
150	14.6	6.43	1.72	0.66	0.21					
175	19.8	8.72	2.36	0.91	0.28					
200	25.9	11.40	3.06	1.19	0.37	0.17				
250	40.4	17.90	4.78	1.85	0.58	0.27				
300		25.80	6.85	2.67	0.84	0.39	0.20			
350		35.10	9.36	3.64	1.14	0.53	0.27			
400			12.10	4.75	1.50	0.69	0.35	0.19		
450			15.40	5.98	1.89	0.88	0.46	0.25		
500			19.20	7.42	2.34	1.09	0.55	0.30		
600			27.60	10.70	3.36	1.56	0.79	0.44		
700			37.70	14.50	4.55	2.13	1.09	0.59		
800				19.00	5.89	2.77	1.42	0.78		
900				24.10	7.60	3.51	1.80	0.99		
1000				29.80	9.30	4.35	2.21	1.22		
1500					21.00	9.80	4.90	2.73	1.51	0.57
2000					37.40	17.30	8.80	4.90	2.72	0.99
2500						27.20	13.80	8.30	4.20	1.57

*From "Compressed Air Handbook" published by Compressed Air and Gas Institute, 90 West Street, New York 6, N. Y.

For longer or shorter lengths of pipe, the friction loss is proportional to the lengths. For example, in 500 feet of 1½-inch pipe, transmitting 100 c.f.m. of free air, the pressure loss would be 1.43 p.s.i. (½ of the table value) and for 4000 feet of 3-inch pipe, transmitting 300 c.f.m. of free

air, the loss would be 3.36 p.s.i. (4 times the table value for 3-inch pipe.)

It pays to use pipe of proper size since it costs no more for labor to install proper size pipe than pipe that is too small. In fact, it pays in power saved to install oversize pipe, especially if an expansion of presently planned operations is anticipated. The only real difference in cost is the extra cost of the larger size of pipe, and this is not a major consideration, as a comparison of the costs given in Table 9 will show.

Table 9. Wholesale Cost of Pipe in Small Lots – 1962.

Nominal Pipe Diameter, Inches	Cost of Pipe per Foot	
	Black Iron	Galvanized
1	27.85 cents	31.65 cents
1¼	36.95 "	42.50 "
1½	44.00 "	50.00 "
2	60.40 "	69.05 "
2½	97.15 "	112.10 "
3	127.10 "	147.00 "
3½	172.75 "	194.50 "
4	199.50 "	227.25 "

Table 10. Loss of Pressure Through Screw Pipe Fittings
Given in equivalent lengths of straight pipe.*

Nominal Pipe Size Inches	Gate Valve	Globe Valve	On Run Standard Tee	Tee Through Side outlet	Standard Ell or Tee Reduced 50% in size
1	0.61	29.1	1.05	5.24	2.62
1¼	0.81	38.3	1.38	6.90	3.45
1½	0.94	44.7	1.61	8.04	4.02
2	1.21	57.4	2.07	10.30	5.17
2½	1.44	68.5	2.47	12.30	6.16
3	1.79	85.2	3.07	15.30	6.16
4	2.35	112.0	4.03	20.20	7.67
5	2.94	140.0	5.05	25.20	10.10
6	3.54	168.0	6.07	30.40	15.20

*Taken from "Piping Handbook" 4th Edition (1945) by Sabin Crocker, M.E. Published by McGraw-Hill Book Company, New York, N.Y.

From Table 8 the pressure loss in 1000 feet of 2-inch pipe carrying 300 cubic feet of free air per minute is 6.85 p.s.i., while the loss in a 2½-inch pipe of the same length and carrying the same volume of air is only 2.67 p.s.i., a reduction in pressure loss of 4.18 p.s.i. Yet, the 2½-inch pipe costs only 37.35 cents per foot more than the 2-inch pipe giving a total increase in cost of only $373.50 for the 1000 feet. Moreover, the 2½-inch pipe will deliver 450 c.f.m. of free air, a 50 percent increase in the volume of air delivered, with a total pressure loss of only 5.98 p.s.i. It is obvious that, even with this increase in the volume of air delivered, the loss is less than that sustained when 300 c.f.m. of free air is carried in the 2-inch pipe.

Pipe fittings. Many fittings of various types, such as valves, tees, and ells will be installed in the distribution lines. These fittings, because of their shape, act as partial obstructions to the flow of compressed air in the lines and cause a loss of pressure. Table 10 gives the pressure loss for various fittings in terms of the length of pipe in which the same loss would occur.

Problem 7.

If a 2-inch globe valve is installed in 100 feet of 2-inch pipe, what is the equivalent length of pipe to be used in determining the pressure loss?

Solution:

Length of 2-in. pipe	= 100.0 feet
Equivalent length of pipe for globe valve (Table 10)	= 57.4 feet
Total equivalent length of 2-in. pipe	= 157.4 feet

It should be noted here that the resistance in globe valves is very high, and valves of this type are not commonly used in mine air pipe line systems.

Table 11. Friction of Air in Hose.*

Size of Hose Inches	Gage Pressure at Line Lbs.	Cubic Feet Free Air Per Minute passing Through 50-Foot Lengths of Hose								
		70	80	90	100	110	120	130	140	150
		Loss of Pressure (Lbs. Per Sq. In.) in 50 Ft. Lengths of Hose								
¾	80	2.8	3.6	4.7	5.8	7.2	8.8	10.6		
	90	2.3	3.1	4.0	5.0	6.2	7.5	9.0		
	100	2.0	2.7	3.5	4.4	5.4	6.6	7.9	9.4	11.1
	110	1.8	2.4	3.1	3.9	4.9	5.9	7.1	8.4	9.9
1	80	0.7	0.8	1.1	1.4	1.7	2.0	2.4	2.7	3.5
	90	0.6	0.7	0.9	1.2	1.4	1.7	2.0	2.4	2.8
	100	0.5	0.6	0.8	1.0	1.2	1.5	1.8	2.1	2.4
	110	0.4	0.6	0.7	0.9	1.1	1.3	1.5	1.8	2.1
1¼	80	0.2	0.2	0.3	0.4	0.5	0.6	0.7	0.8	1.0
	90	0.2	0.2	0.3	0.3	0.4	0.5	0.6	0.7	0.8
	100	0.1	0.2	0.2	0.3	0.4	0.4	0.5	0.6	0.7
	110	0.1	0.2	0.2	0.3	0.3	0.4	0.5	0.5	0.6
1½	80				0.1	0.2	0.2	0.2	0.3	0.4
	90					0.1	0.2	0.2	0.2	0.3
	100						0.1	0.2	0.2	0.2
	110						0.1	0.2	0.2	0.2

*From "Compressed Air Handbook" by Compressed Air and Gas Institute, 90 West Street, New York 6, N.Y.

Hose. The final link in the distribution system is a flexible hose. The compressed air is taken from the permanent or semipermanent metal pipe lines through a hose to drilling and mucking machines. The hose is usually rubber lined, and although this lining appears to be smooth,

the friction loss is fairly high. The pressure losses that may be expected in 50-foot lengths of different sizes of hose are shown in Table 11. For longer or shorter lengths of hose the friction loss is proportional to the length; for example, for 25 feet, use ½ of the Table value, for 150 feet, use 3 times the Table value.

Problem 8.

A 2¾-inch drifter is connected to the main air line by 50 feet of 1¼-inch hose. This machine uses 130 c.f.m. of free air per minute at 90 p.s.i.g. as given in Table 2. What is the friction loss in the hose?

Solution:

From Table 11 the loss in 50 feet of 1¼-inch hose when 130 c.f.m. of free air at 90 p.s.i.g. is flowing is 0.6 p.s.i.

If a 1-inch hose were used instead of the 1¼-inch, the loss would be 2.0 p.s.i. If a ¾-inch hose were used the loss in 50 feet would be 9.0 p.s.i., a very high loss.

It is doubtful if a ¾-inch hose should be used anywhere in a normal mining operation because of the high friction loss when large quantities of air must pass through it.

Problem 9.

An exploration project is located at 5000 feet above sea level. The compressor and receiver are 200 feet from the tunnel mouth and the maximum length of the tunnel will be 1200 feet. Four standard elbows (ells) and one gate valve will be used in the pipe line between the receiver and the tunnel, and two gate valves and five "on run" tees to service possible stoping areas will be placed in the pipe line along the tunnel. One air-leg (sinker) type of drill with a 2⅝-inch hammer will be used for drifting and cross cutting and will be connected to the pipe line with a 50-foot length of hose. If the average pressure in the receiver will be 100 p.s.i.g., and if the maximum pressure loss between the receiver and the machine should not exceed 10.0 p.s.i., what size pipe and hose should be installed between the receiver and machine?

Solution:

A 2⅝-inch sinker type drill, used as an air-leg machine, requires approximately 110 c.f.m. of free air at sea level (Table 2). The multiplying factor for one machine at 5000 feet elevation is 1.18 (Table 4). $110 \times 1.18 =$ 130 c.f.m. of free air required.

Step 1. Estimating pipe size:

In order to reduce the number of trial calculations necessary to determine the pressure losses for various sizes of pipe, it is desirable first to obtain a reasonable estimate of the minimum pipe size that should be used in the system. This can be done using Table 7. The total length of the pipe line uncorrected for fittings is 1400 feet (200 feet between receiver and tunnel plus 1200 feet in tunnel), and the air requirements are 130 c.f.m. These quantities are between the ranges 100-200 c.f.m. and 1000-2500 feet, respectively, and a 2½-inch pipe line is indicated. Inasmuch as the actual quantities are both near the lower limits of the ranges tabulated in Table 7, it is possible that a 2-inch pipe will be satisfactory, and this figure will be used in the first trial calculation.

Step 2. Calculations using 2-inch pipe:

Referring to Table 8, 130 c.f.m. is not listed, and therefore the pressure loss per 1000 feet must be found by interpolating between the values for 125 and 150 c.f.m.

Subtracting the respective pressure losses and c.f.m. transmitted:

$$1.72 \text{ p.s.i.} - 1.19 \text{ p.s.i.} = .53 \text{ p.s.i.}$$
$$150 \text{ c.f.m.} - 125 \text{ c.f.m.} = 25 \text{ c.f.m.}$$

and: $130 \text{ c.f.m.} - 125 \text{ c.f.m} = 5 \text{ c.f.m.}$

therefore: $\frac{5}{25} = \frac{X}{.53}$ or, $X = .11$ p.s.i.

Adding this to the table value of the pressure loss for 125 c.f.m.:

$$1.19 + .11 = 1.30 \text{ p.s.i.}$$

This is the pressure loss per 1000 feet of 2-inch pipe.

It is next necessary to find the effective length of pipe line:

Straight pipe line (200+1200)		=	1400.00 ft.
4 standard ells (Table 10)	4 × 5.17	=	20.68 "
3 gate valves (Table 10)	3 × 1.21	=	3.63 "
5 on-run tees (Table 10)	5 × 2.07	=	10.35 "
Effective length		=	1434.66 "

Using 1435 feet as the effective length of main line, the number of 1000-foot units in the line equals $\frac{1435}{1000}$ or 1.44.

Multiplying the pressure loss per 1000 feet of pipe by the number of 1000-foot sections:

$$1.30 \times 1.44 = 1.87 \text{ p.s.i.}$$

This is the pressure loss between the receiver and the end of the pipe line, using 2-inch pipe.

From Table 11 the loss in 50 feet of 1-inch hose with 130 c.f.m. of free air flowing under a pressure of 100 p.s.i.g is 1.8 p.s.i. and the total loss in the system, using a 2-inch main line will be:

$$1.87 + 1.80 = 3.67 \text{ p.s.i., total loss in system.}$$

A loss of 3.67 p.s.i. is well under the 10 p.s.i. maximum loss generally considered acceptable and also allows for some expansion in the operation.

In addition to the pressure loss resulting from a poorly designed distribution system, low pressure may result from any one or combination of the following reasons:

1. A compressor that is too small for the equipment being used.
2. Leaks in the system.
3. Use of compressed air in working places for ventilation.

The methods to be used in selecting the proper sized compressor have already been discussed.

The detection of leaks in the compressed air system, however, is not nearly as obvious. Unlike hydraulic lines where leaks are very apparent, air lines may leak undetected. Pipe fittings are a prime source of leaks in the air line, especially stop cocks and unions. One small leak may not waste much air, but several such leaks may mean the difference between efficient and costly operation of the machines.

As shown in Table 12, a 1/16-inch hole or a number of smaller holes that will equal a 1/16-inch hole will cause a loss of about 6000 cubic feet of free air per day. This amount of lost air is enough to operate a 2½-inch drilling machine continuously at full throttle for one hour, about enough air to drill a round in a small drift.

Table 12. Cost of Air Line Leaks.*

Size of Opening (inches)	Air Lost (cfm/month at 100 p.s.i.g.)	Cost of Air lost (at 10c per 1000 cu. ft.)
1/32	45,508	$ 4.55 per mo.
1/16	182,272	18.23 " "
1/8	740,210	74.02 " "
1/4	2,920,840	292.08 " "
3/8	6,671,890	667.19 " "

*Adapted from "A Beginner's Course in Basic Pneumatics," by Industrial Publishing Corp., Cleveland 15, Ohio.

There is no reason to tolerate a leaking distribution system. "The detection and stopping of leaks is an important factor in the efficient operation of a compressed air system. Plant maintenance departments have developed many simple checks for leaks. Lighted candles or carbide lamps are held close to places in the line where leaks are suspected, and small leaks will cause an erratic flickering and sputtering of the flame. Soapy water may be applied to places where small leaks are suspected. One operator put essence of peppermint in the air system just before the lines were inspected for leaks. Sensitive whistles or anemometers may be used. The air lines in a mine should be checked for leaks at least once each week and if any are found they should be repaired at once."*

Ventilation by direct use of compressed air is very expensive. If other ventilation is not provided, the miners may open an air valve to help ventilate their working place. This has the same effect as adding additional machines to the system and increases the c.f.m. of free air used and thus increases the pressure drop in the system.

THE COMPLETE COMPRESSED AIR SYSTEM

In the previous sections the steps to be followed in the design of a compressed air system have been considered individually. The following problem is presented to acquaint the reader with the manner in which these steps are linked together when designing the complete compressed air system.

Problem 10.

Figure 2 is a vertical section through the shaft, drifts, stopes, and surface plant of a small mine situated at an elevation of 7000 feet above sea level. The compressor, receiver, and pipe line and fittings that will be used on the surface are shown in their usual positions. A 2-compartment vertical shaft serves the workings. Levels are 125 feet apart for the four levels shown. The upper three levels are inactive and all work will be done on the 4th level in two areas, one on each side of the shaft. The same kind

*From "A Beginner's Course in Basic Pneumatics" by Industrial Publishing Corp., Cleveland 15, Ohio.

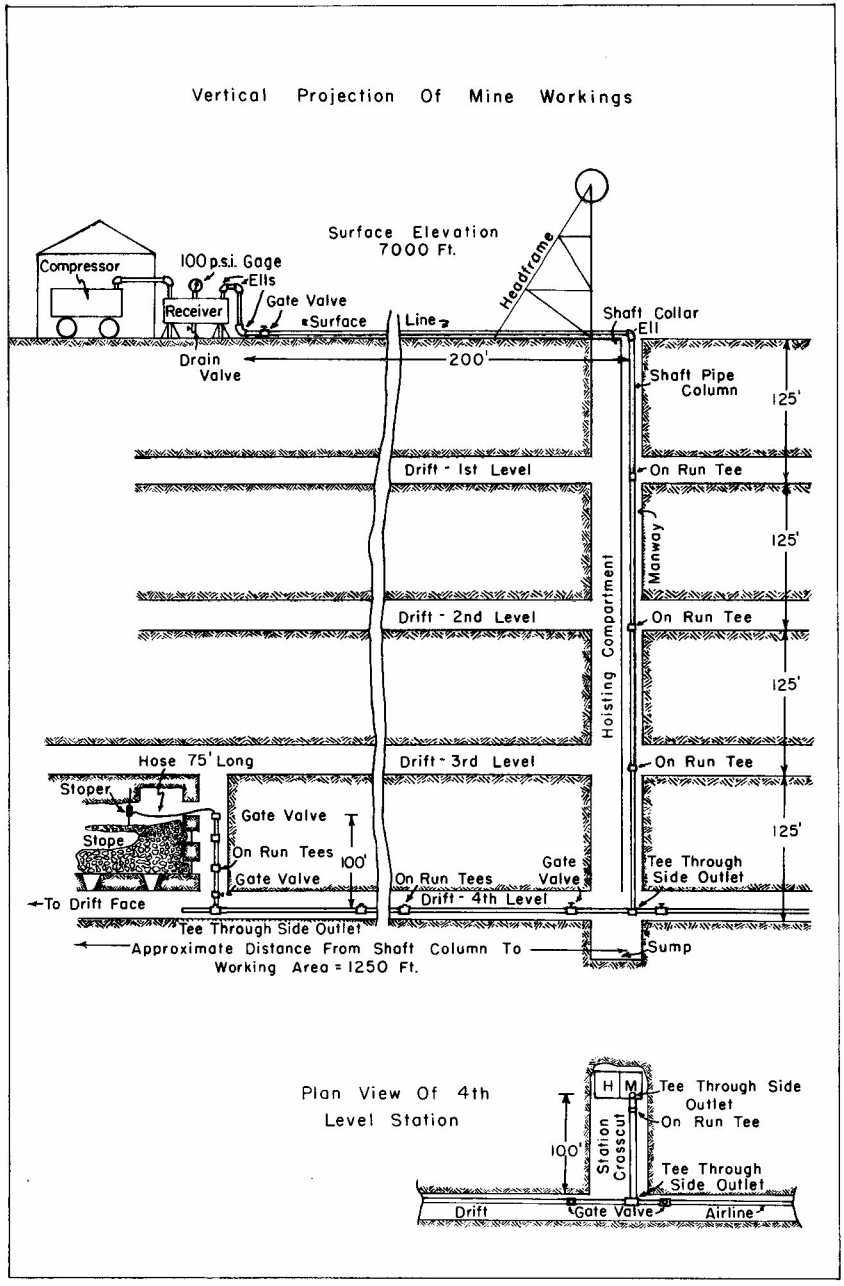

Fig. 2. Sketch of mine and compressed air system used in Problem 10.

and number of air tools will be used in each work area, as follows:

2 stopers with 2-9/16-in. hammers
1 drifter with 2-3/4-in. hammer
1 small-size, track-mounted mucking machine
1 small air-driven fan

There will also be one small pump on the 4th level station. For efficiency of operation, the stopers will be equipped with 75-foot lengths of hose, and the drills and mucking machine in drifts and cross-cuts with 50-foot lengths of hose. The air pressure at the machine farthest from the receiver is to be maintained at 90 p.s.i.g. or more.

Solution:

Step 1. Determine free air needed for the entire operation.
The effect of the difference in elevation between the surface and the 4th level will be neglected since it is small and favorable.
Mucking machine. Assume that only one mucking machine will be used and that it will be moved from one working area to the other as needed.
Average sea level air consumption (page 8) = 300 c.f.m., Multiplier for 1 machine at 7000 feet (Table 4) = 1.27
300 × 1.27 = 381 c.f.m..... 381
Stopers. 4 machines, 2 in each work area.
Sea level air consumption of 2-9/16-in. stoper (Table 2) = 140 c.f.m., Multiplier for 4 machines at 7000 feet (Table 5) = 4.2
140 × 4.2 = 588 c.f.m..... 588
Drifters. 2 machines, 1 in each work area.
Sea level air consumption of 2-3/4-in. drifter (Table 2) = 130 c.f.m., Multiplier for 2 machines at 7000 feet (Table 5) = 2.2
130 × 2.2 = 286 c.f.m..... 286
Fans. 2 machines 1 in each work area.
Sea level air consumption of small fan (estimate) = 25 c.f.m
As the fans will each be operated nearly continuously, the multiplier for 1 tool at 7000 feet will be used and the result multiplied by 2. Multiplier (Table 4) = 1.27
25 × 1.27 × 2 = 64 c.f.m..... 64
Pump. 1 machine at 4th level station.
Sea-level air consumption of small pump (estimate) = 50 c.f.m.
Multiplier for 1 tool at 7000 feet (Table 4) = 1.27
50 × 1.27 = 64 c.f.m..... 64

Total free air requirements for the operation = 1383 c.f.m.

Design the system on the basis of 1400 c.f.m. of free air required.

Step 2. Select the compressor.
Since the volume of free air needed, 1400 c.f.m., is greater than the output of any single portable compressor listed in Table 6, two or more compressors will be required. One 420 c.f.m. and two 500 c.f.m. reciprocating compressors, delivering a total of 1420 c.f.m. of free air, would just suffice but will leave no room for expansion. Alternatively, one 900 c.f.m. and one 600 c.f.m. rotary sliding-vane compressor will deliver a total volume of 1500 c.f.m. of free air. This is slightly in excess of the computed requirements and allows some room for expansion.
If a single stationary compressor is selected, it would need to have an actual displacement of 1400 c.f.m. If a volumetric efficiency of 85% is assumed, a compressor with a mechanical displacement of at least 1647 c.f.m. (1400 divided by .85), based on the manufacturer's specifications, will be required. However, if any expansion of the mining operation is anticipated, allowance should be made for 10 to 25 per cent additional capacity, and a com-

pressor with a mechanical displacement of 1800 to 2000 c.f.m. should be selected.

Step 3. Select the receiver.
From Table 1 a receiver having a diameter of 48 inches and a length of 12 feet is recommended for a compressor capacity of 1275 c.f.m. This size is slightly smaller than should be used and will not allow for expansion of the operations. A receiver 54 inches in diameter and 12 feet long would be satisfactory.

Step 4. The distribution system.

Section A: Surface line, shaft column and cross-cut.
Total length of straight pipe in this part from Fig. 2.

Surface length	210 ft.
Shaft column	500 ft.
Cross cut	100 ft.
Total	810 ft.

From Table 8 a 4½-in. line carrying 1400 c.f.m. of free air would show a pressure loss somewhat less than 2.73 p.s.i. per 1000 feet. This loss seems to be within reasonable limits and a 4½-in. pipe will be used for a trial computation.

Total length of straight pipe		810.00 ft.
Fittings, Table 10 (use values for 5-in. pipe)		
4 standard ells 4 × 10.10	=	40.40 ft.
1 gate valve 1 × 2.94	=	2.94 ft.
4 on-run tees 4 × 5.05	=	20.20 ft.
1 tee through side outlet 1 × 25.20	=	25.20 ft.
Total effective length of pipe	=	898.74 ft.

Using 900 feet as the effective length of the line, the number of 1000-foot units in the line is 0.9. Referring to Table 8, 1400 c.f.m. is not listed, and the pressure loss per 1000 feet must be found by the method shown in Problem 9. By this method a value of 2.42 p.s.i. per 1000 feet of 4½-inch pipe is obtained. Multiplying this value by 0.9, the number of 1000-foot sections, a loss of 2.18 p.s.i. is obtained and this is a reasonable value.

Section B: Pipe line in the drift on *one* side of the shaft.
The total volume of air will be split at the end of the crosscut and a volume equal to the maximum needs of the various air tools used in the working area at the end of one drift will be carried in a pipe line along the drift.

Volume of air required in each working area.	C.F.M.
1. Mucking machine, as given in Section A, will use 380 c.f.m. at 7000 feet elevation.	380
2. Two stopers each using 140 c.f.m. at sea level. From Table 5 the multiplier for two machines at 7000 feet is 2.2 Therefore 2.2 × 140 = 308 c.f.m.	308
3. One drifter using 130 c.f.m. at sea level. Multiplier from Table 4 at 7000 feet elevation for one machine is 1.27 Therefore 1.27 × 130 = 165 c.f.m.	165
4. One small fan using 32 c.f.m. at 7000 feet elevation (from Section A)	32
Computed volume of free air per working area =	885

Use 900 c.f.m. for calculations.
Total length of straight pipe in the drift is 1250 feet (See Fig. 2).

From Table 8 the loss in 1000 feet of 3½-in. pipe with 900 c.f.m. of free air flowing is 3.51 p.s.i. and for 1250 feet $= \frac{1250}{1000} \times 3.51 = 4.39$ p.s.i.

Recompute drift line after adding fittings:

If a 50-foot shaft pillar is left and raises between stopes are 120 feet apart there will be 10 on-run tees in the drift line.

10 on-run tees by interpolating between the values for a 3-inch pipe and a 4-inch pipe in Table 10, 3.55 × 10 =	33.55 ft.
Tee through side outlet by interpolating in the table the value is	17.75 ft.
One gate valve from table is	2.07 ft.
Total length of straight pipe from above	1250.00 ft.
Total equivalent length of straight pipe	1303.37 ft.

For calculations use 1300 feet.

Then the loss in this section is

$$\frac{1300}{1000} \times 3.51 = 4.56 \text{ p.s.i.}$$

Section C: Pipe and hose into stope.

If only one stoper is used in each stope, the amount of free air at this elevation is 140 c.f.m., the amount used at sea level by a stoper, multiplied by the multiplier for one machine at 7000 feet from Table 4.

Therefore 140 × 1.27 = 178 c.f.m.

From Table 7 the loss in 1000 feet of 1½-inch pipe is 8.72 p.s.i. with 175 c.f.m. free air. For 100 feet of pipe the loss is $\frac{100}{1000} \times 8.72$ p.s.i. = 0.87 p.s.i.

This loss is reasonable and a 1½-in. pipe can be used.

Fittings from Table 10.

One tee through side outlet	8.04 ft.
Two gate valves = 2 × .94 =	1.88 ft.
Two on-run tees = 2 × 1.61 =	3.22 ft.
Straight pipe (Fig. 2)	100.00 ft.
Equivalent length of straight pipe	113.14 ft.

For calculations use 115 feet of pipe.

Therefore, the loss in the pipe is $\frac{115}{1000} \times 8.72 = 1.00$ p.s.i.

Hose. The friction loss in 50-foot lengths of hose of several sizes is given in Table 11. Unfortunately the values for the sizes given do not extend beyond 150 c.f.m. of free air. However, the actual amount required for one machine at this level of elevation, 178 c.f.m., is fairly close to the top values in the table, and these values may be used. Since the machine in the stope is at the end of the distribution system, the pressure in the hose will be about 90 p.s.i.g., and values for this gage pressure will be used.

For a 1¼-inch hose the pressure loss from Table 11 for 150 c.f.m. at 90 p.s.i.g. through 50 feet of hose is 0.8 p.s.i.

For 75 feet of 1¼-inch hose the loss is $\frac{75}{50} \times 0.8 = 1.2$ p.s.i.

This loss, 1.2 p.s.i., is reasonable and 75 feet of 1¼-in. hose should be used.

Summary of pressure losses in the distribution system:

Section A – Surface line, shaft column and cross cut	= 2.18 p.s.i.
Section B – Pipe line in drift on *one* side	= 4.56 p.s.i.
Section C – Pipe in raise	= 1.00 p.s.i.
Hose	= 1.20 p.s.i.
Total loss in the distribution system	= 8.94 p.s.i.

This loss, 8.94 p.s.i, is less than 10% of the 100 p.s.i.g. at the receiver and the distribution system should give satisfactory service for the air tools specified. If, however, it should be necessary to use additional air-consuming equipment, the system would be inadequate, especially the line in the drift, and larger pipe should be installed.

APPENDIX

In the preceding discussion of the characteristics of compressed air, the relationship between pressure and volume was given qualitatively. The following sections are primarily for the reader who is interested in a more quantitative treatment of the subject and in the methods whereby the multiplying factors appearing in the various tables were obtained.

GAS LAWS

The behavior of air in the range of conditions that may be expected in the usual compressed air system is controlled by three variable quantities: Pressure, volume, and temperature; the relationships between these three quantities are defined by the gas laws.

Charles' Law. Charles' Law shows the relationship between temperature and volume if the pressure is maintained constant. It shows that the volume of a gas varies directly as the absolute temperature; if the absolute temperature of the gas is doubled, the volume will be doubled. The absolute zero as measured on the Fahrenheit scale is 460 degrees below the zero on this scale. If we let

V_1=initial volume of air,
V_2=final volume of air,
T_1=initial absolute temperature, and
T_2=final absolute temperature,

then Charles' Law may be expressed by the formula:

$$\frac{V_1}{V_2} = \frac{T_1}{T_2}$$

To illustrate with an example, suppose the temperature of the compressed air in a receiver on the surface is 90°F, and as the compressed air passes through the distribution system it is cooled to 50°F. To what amount would 100 cubic feet of compressed air be reduced when it arrived at the machines underground? For this problem

V_1 = 100 cubic feet of compressed air in receiver,
V_2 = unknown volume of compressed air arriving at machines,
T_1 = 90 + 460 = 550° absolute temperature at receiver, and
T_2 = 50 + 460 = 510° absolute temperature at machines.

Therefore:

$$\frac{100}{V_2} = \frac{550}{510}$$

$$V_2 = \frac{100 \times 510}{550} = 92.73 \text{ cubic feet of compressed air at machines.}$$

The temperature change as shown in the above problem would exist only for part of the day during the summer months. During the balance of the time the surface and underground temperature would be more nearly equal, except in winter when the situation would be reversed. When the surface temperature is below the underground temperature, there would be a favorable increase in volume.

From the standpoint of compressor design, Charles' Law is very important, but temperature changes, such as the one mentioned above, are generally neglected in compressed air calculations for small mine plants.

Boyle's Law. Boyle's Law expresses the relationship between pressure and volume if the temperature is maintained constant. It shows that the volume of a gas varies inversely (in the opposite order) as the pressure. In other words, the volume of air decreases as the pressure increases. If the pressure of a given volume of air is doubled, the volume is reduced to half the original volume. The pressure used to describe this relationship is the absolute pressure. If we let

P_1=initial (beginning) pressure of the free air in p.s.i.a.,
P_2=final (ending) pressure of compressed air in p.s.i.a.,
V_1=initial (beginning) volume of free air, and
V_2=final (ending) volume of compressed air,

then Boyle's Law may be expressed by the formula:

$$\frac{P_1}{P_2} = \frac{V_2}{V_1}$$

As an example of the use of this formula, suppose the atmospheric pressure of the air at the intake of a compressor is 14.7 p.s.i.a. (sea level), and the discharge pressure of the compressor is 100 p.s.i.g. How much compressed air would the compressor discharge for every one hundred cubic feet of free air taken into the compressor?

For this problem

P_1 = 14.7 p.s.i.a. initial absolute pressure,
P_2 = 100.0 + 14.7 = 114.7 p.s.i.a., final absolute pressure,
V_1 = 100 cubic feet of free air, and
V_2 = unknown amount of compressed air.

Therefore:

$$\frac{P_1}{P_2} = \frac{V_2}{V_1}$$

$$\frac{14.7}{114.7} = \frac{V_2}{100}$$

$$V_2 = \frac{14.7 \times 100}{114.7} = 12.8 \text{ cubic feet.}$$

In other words, 100 cubic feet of free air under an atmospheric pressure of 14.7 p.s.i.a. (sea level conditions) will be reduced to 12.8 cubic feet of compressed air when the pressure is increased to 100 p.s.i.g., or 114.7 p.s.i.a. It is assumed that the compressor's cooling system, receiver and pipe lines will cool the compressed air to a temperature near that of

the free air at the compressor intake. For all practical purposes the air is compressed at constant temperature.

Table 13. Atmospheric Pressure vs. Elevation.

Elevation above Sea-Level Feet	Atmospheric Pressure p.s.i.a.	Elevation above Sea-Level Feet	Atmospheric Pressure p.s.i.a
0	14.7	7000	11.3
1000	14.2	8000	10.9
2000	13.7	9000	10.5
3000	13.2	10000	10.1
4000	12.7	11000	9.7
5000	12.2	12000	9.3
6000	11.8	13000	9.0

To illustrate the effect of elevation on the volume of compressed air delivered, suppose the compressor in the above example is located at 7000 feet above sea level where the atmospheric pressure is 11.3 p.s.i.a. (Table 13), and the discharge pressure of the compressor is 100 p.s.i.g. For every 100 cubic feet of free air taken into the compressor at this elevation, how much compressed air will be discharged? For this problem

P_1 = 11.3 p.s.i.a. (absolute pressure at intake),
P_2 = 100.00 + 11.3 = 111.3 p.s.i.a., absolute pressure at discharge,
V_1 = 100 cubic feet of free air, and
V_2 = unknown amount of compressed air.

Therefore:

$$\frac{P_1}{P_2} = \frac{V_2}{V_1}$$

$$\frac{11.3}{111.3} = \frac{V_2}{100}$$

$$V_2 = \frac{100 \times 11.3}{111.3} = 10.15 \text{ cubic feet.}$$

This example shows that at elevations higher than sea level, a compressor will deliver less compressed air at the desired gage pressure from the same volume of the "lighter" air at the intake. The actual difference between the two problems above is 12.8 − 10.15 = 2.65 cubic feet – a difference of about 20 per cent. The above relationship is extremely important when selecting a compressor for a mine that is located at an elevation above sea level.

Calculations of the type shown above can be used to determine the output of a given compressor at various altitudes when the rated sea level capacity is known. For example, to compare the volume of compressed air delivered by a 315 c.f.m. compressor at 100 p.s.i. gage pressure at sea level to the amount delivered by the same compressor at 100 p.s.i. gage pressure at 7000 feet elevation, where the atmospheric pressure is 11.3 p.s.i.a. (See Table 13). Boyle's Law will be used to compute the values in both cases.

At sea level:

P_1 = 14.7 p.s.i.a. (sea level).
P_2 = 100 p.s.i.g. (gage pressure).
V_1 = 315 c.f.m. (intake volume – constant for all elevations).
V_2 = unknown volume of compressed air at 100 p.s.i.g. at sea level.

$$\frac{14.7}{100 + 14.7} = \frac{V_2}{315}$$

$$V_2 = \frac{14.7 \times 315}{114.7} = \frac{4630.5}{114.7} = 40.37 \text{ c.f.m.}$$

At 7000 feet elevation above sea level:

P_1 = 11.3 p.s.i.a. (See table 13).
P_2 = 100 p.s.i.g. (gage pressure).
V_1 = 315 c.f.m. (intake volume – constant for all elevations).
V_2 = unknown volume of compressed air at 100 p.s.i.g. at 7000 feet elevation.

$$\frac{11.3}{100+11.3} = \frac{V_2}{315}$$

$$V_2 = \frac{11.3 \times 315}{111.3} = \frac{3559.5}{111.3} = 31.98 \text{ c.f.m.}$$

To express this change in the amount of compressed air delivered on a percentage basis, $\frac{31.98}{40.37} \times 100 = 79.2$ per cent. In other words, this compressor will deliver only 79.2 per cent as much compressed air at 100 p.s.i. gage pressure at 7000 feet elevation as it will at sea level.

Boyle's Law may also be used to determine the compressor capacity required at various altitudes when the sea-level air requirements of the air tools being used are known. For example, consider a mine located 7000 feet above sea level. The stoping and drifting operations will use the following air tools:

One 2⅜-in. sinker using 70 c.f.m. free air at sea level. (Table 2). One 2-9/16-in. stoper using 140 c.f.m. free air at sea level. (Table 2). 70 + 140 = 210 c.f.m. free air at sea level.

Corrected to 7000 feet elevation by Boyle's Law:

$$\frac{P_1}{P_2} = \frac{V_2}{V_1}$$

P_2 for 7000 feet elevation from Table 13 = 11.3 p.s.i.a.

$$V_2 = \frac{P_1 V_1}{P_2}$$

$$V_2 = \frac{14.7 \times 210}{11.3} = \frac{3087}{11.3} = 273 \text{ c.f.m. of free air required at 7000 feet.}$$

The free air requirements at 7000 feet are approximately 1.3 times as great as at sea level. The multiplying factors in Table 4 were determined in this manner.

CALCULATION OF VALUES FOR TABLE 8

Many empirical formulae have been devised to determine the flow characteristics of liquids and gases in pipes. Among the more common ones for determining the friction losses are the Darcy and Hazen-Williams formulae for hydraulics and the Harris and Fritzsche formulae for air.

The values in Table 8 are based on the Harris formula only.

The Harris formula is:

$$f = \frac{CL}{r} \times \frac{Q^2}{d^5}$$

where:

f=friction loss in p.s.i.
L=length of pipe in feet
Q=cu. ft. of *free air* per *second*
r=compression ratio $= \frac{\text{final absolute pressure}}{\text{initial absolute pressure}}$
d=*actual* internal diameter of pipe in inches.
C=experimental coefficient.

The coefficient (C) for ordinary pipe in good condition $= \frac{.1025}{d^{.31}}$. If the interior of the pipe to be used is rusty, pitted, or coated, the coefficient will be larger and the friction loss will be greater. Rusty or dirty pipe should not be used for air lines because this material will scale off and clog and damage equipment. Therefore for ordinary pipe in good condition the Harris formula is:

$$f = \frac{.1025}{d^{.31}} \times \frac{L}{r} \times \frac{Q^2}{d^5}$$

$$f = \frac{.1025}{d^{5.31}} \times \frac{L}{r} \times Q^2$$

The following is an example of the use of this formula:

1000 ft. of 2-inch pipe is to carry 500 c.f.m. of free air at 100 p.s.i.g. at sea level.

Find the friction loss f in p.s.i.:

$$f = \frac{.1025}{(2.067)^{5.31}} \times \frac{1000}{r} \times \left(\frac{500}{60}\right)^2$$

where the actual d for a 2-inch pipe = 2.067 inches, $Q = \frac{500}{60}$, and $(2.067)^{5.31} = 47.26$

Therefore:

$$f = \frac{.1025}{47.26} \times \frac{1000}{r} \times \left(\frac{500}{60}\right)^2 = \frac{150}{r}$$

The above equation gives f in terms of "r." "r" is found as follows:
If the barometric pressure at compressor intake is 14.7 p.s.i.a. determine the value of "r."

$$r = \frac{\text{final absolute press.}}{\text{initial } '' \quad ''} = \frac{114.7}{14.7} = 7.80 \text{ (the compression ratio).}$$

Therefore $f = \frac{150}{7.80} = 19.20$ p.s.i. This is the value shown in Table 8 for a 2-inch pipe carrying 500 c.f.m. of free air at an initial gage pressure of 100 p.s.i.

If the elevation of the compressor intake in the preceding problem is 10,000 feet above sea level what would be the pressure loss for 1000 feet of pipe? From Table 13 the barometric pressure for 10,000 feet is 10.1 p.s.i.

$$r = \frac{110.1}{10.1} = 10.90 \text{ (the compression ratio)}$$

$$f = \frac{150}{10.90} = 13.76 \text{ p.s.i., the pressure loss per 1000 feet of 2-inch pipe line at 10,000 feet in elevation.}$$

ARIZONA BUREAU OF MINES

J. D. FORRESTER, Director

T. G. CHAPMAN, Director Emeritus
G. R. FANSETT, Mining Engineer Emeritus
R. T. MOORE, Associate Geologist
R. T. O'HAIRE, Assistant Mineralogist
H. W. PEIRCE, Assistant Mineralogist
G. H. ROSEVEARE, Metallurgist
F. L. STUBBS, Assistant Mining Engineer
E. D. WILSON, Geologist
N. J. YOUNG, Draftsman Statistics Clerk

SERVICES AVAILABLE FROM ARIZONA BUREAU OF MINES THE UNIVERSITY OF ARIZONA, TUCSON, ARIZONA

The Arizona Bureau of Mines, which functions as a part of the University of Arizona, Tucson, is conscious of its opportunities and responsibilities to render continuing service about mineral resources to the people of Arizona; accordingly it has a program of operation designed to contribute as many sound benefits as possible. The broad objectives of this program are to:

1. Prepare and publish bulletins and circulars containing authoritative information on a wide range of topics of interest to prospectors, miners, and others concerned with the development of Arizona's mineral resources and industries. The bulletins are distributed free of charge to residents and at cost to non-residents of Arizona upon request.

2. Classify mineral and rock specimens. Besides identifying rocks and giving the composition of minerals, the Bureau makes qualitative tests for important elements and answers inquiries concerning the probable market for and the economic value of material similar to samples submitted. This service is furnished free of charge providing the specimens originate within the State of Arizona; a charge of $1 per specimen is made for samples submitted from outside the State. When spectrographic analyses or detailed microscopic determinations are desired, they are furnished at established rates, a schedule of which will be submitted on request.

3. Conduct laboratory and pilot-plant metallurgical testing of mineral substances in cooperation with industries and individual mine operators in the State. Such tests are conducted on the basis of nominal charges to compensate for wear and depreciation of equipment needed in the experimentation.

4. Make geologic investigations of mining districts and counties and compile geologic maps and reports. Geologic maps of each county, on a scale of 1:375,000, have been issued. As a product that will result from the compilation of data for the county map issues, a new Geologic Map of the State, as a whole, will be established on a scale of 1:500,000.

5. Maintain a working file of statistical records of mineral production in Arizona.

6. Develop well-log storage facilities and a library of data pertaining to oil and water wells drilled in Arizona.

7. Conduct state-wide commodity studies as to modes of occurrence and potential industrial value of various mineral materials.

8. Collect and file items relating to Arizona mines and minerals that appear in Arizona newspapers and in many technical periodicals.

The basic philosophy which obtains in the operation of Arizona Bureau of Mines is that of providing for the people of Arizona mineral services which cannot be readily secured elsewhere. That is, the Bureau gives advice and service which cannot be obtained conveniently from commercial sources. Competition with industrial concerns is not engaged in and therefore, any work of this nature, such as assaying, is not pursued. An inquiry addressed to the Director, Arizona Bureau of Mines, the University of Arizona, Tucson, will bring a prompt response if further information is desired about the services which are available.

All communications should be addressed and remittances made payable to the Arizona Bureau of Mines, The University of Arizona, Tucson, Arizona.