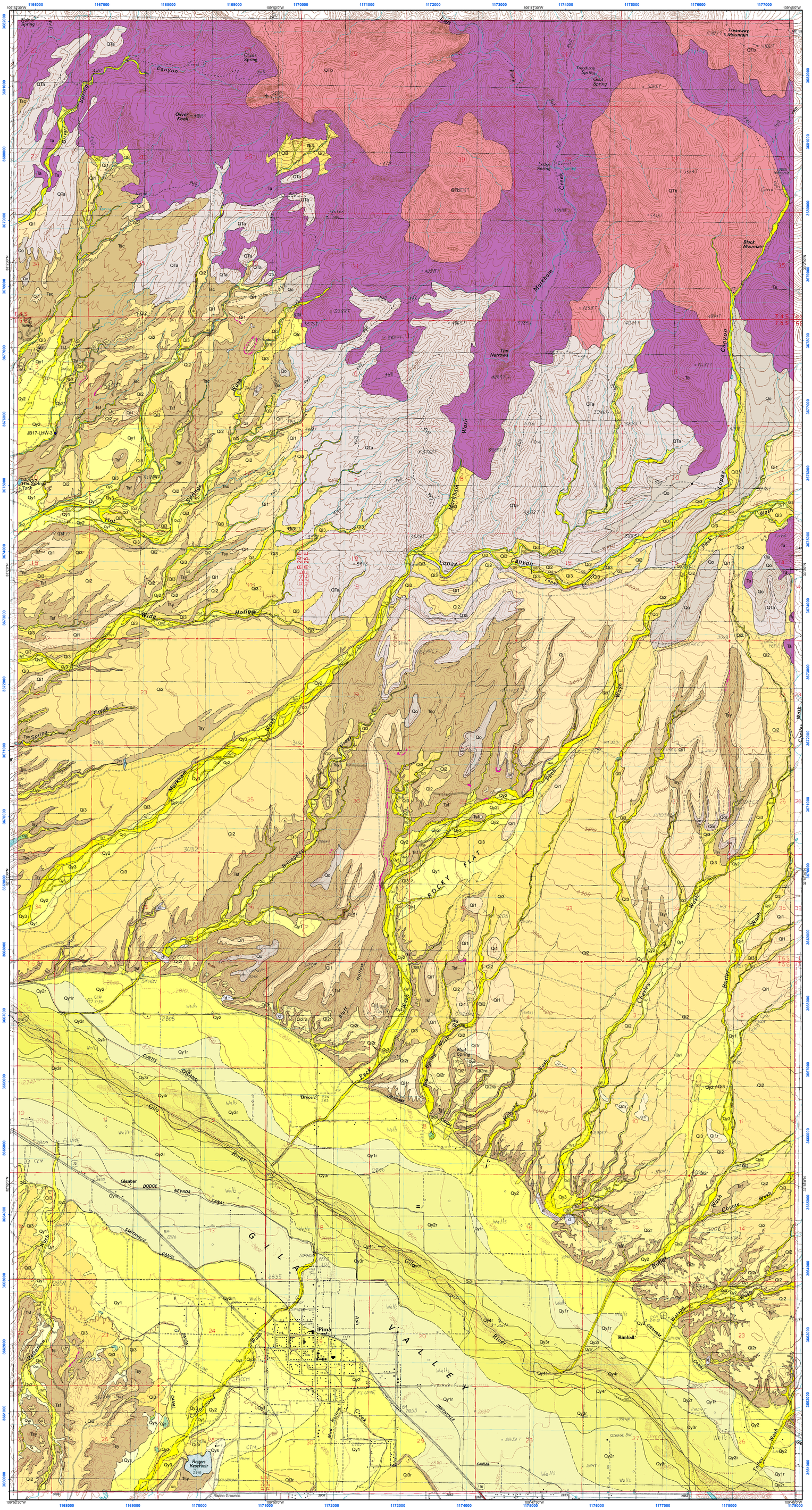

Contacts, faults, and marker beds

- Contact, accurate
- Contact, approximate
- Fault, accurate
- Fault, approximate
- Fault, concealed
- Gradational contact, accurate
- Gradational contact, approximate
- tephra bed, accurate
- tephra bed, approximate
- tephra bed, inferred

Arizona Geological Survey Digital Geologic Map DGM-120
Geologic map of the Pima and southern half of the Markham Creek 7 1/2' Quadrangles

SCALE 1:24,000

1 0.5 0 1 Miles

1 0.5 0 1 Kilometers

0 1000 2000 3000 4000 5000 Feet

CONTOUR INTERVAL 20 FEET

TRUE NORTH
MAGNETIC NORTH
12°
Approximate mean declination, 2013

Topographic base map derived from Pima and Markham Creek 7.5' USGS topographic quadrangle maps originally with NAD27 datum. Reprojected to UTM NAD83 datum (zone 12) using iGage All Topo Maps V9. UTM NAD 83 grid and lat-lon markers produced using ESRI ArcMap v. 10.2.

Geologic map of the Pima and southern half of the Markham Creek 7 ½' Quadrangles, Graham County, Arizona

Ann M. Youberg and Joseph P. Cook

Arizona Geological Survey

Digital Geologic Map 120 (DGM-120)

December 2017

This geologic map was funded in part by the USGS National Cooperative Geologic Mapping Program under StateMap award number G15AC00519, 2015. The views and conclusions contained in this document are those of the authors and should not be interpreted as necessarily representing the official policies, either expressed or implied, of the U.S. Government.

Introduction

Quaternary geology was mapped in the Pima and southern half of the Markham Creek 7 ½ minute quadrangles in the Safford Basin, Graham County, Arizona. The geologic mapping is original but informed by previous works in the Gila River Valley (Gootee, 2012; Houser, 1990; Houser et al., 1985, 2004; Lanphere et. al., 2002). Holocene geomorphic boundaries of the Gila River were based on work by Klawon (2001, 2003) and the bedrock geology was derived from Wilson and Moore (1958). This geologic map complements previous AZGS mapping to the south and east, including the Safford (DGM-104; Cook and Youberg, 2012), Thatcher (DGM-105' Youberg, 2012), and Artesia (DGM-106; Cook, 2012) 7 ½ minute quadrangles. Future efforts are to focus on mapping the basin corridor from these quadrangles west to the boundary of the San Carlos Apache Reservation. This geologic map was funded in part by the USGS National Cooperative Geologic Mapping Program under cooperative agreement number G15AC00519 (awarded for federal fiscal year 2015).

References cited

Cook, J.P., 2013, Geologic Map of the Artesia 7 ½' Quadrangle and the Northeastern Corner of the Mount Graham 7 ½' Quadrangle, Graham County, Arizona. Arizona Geological Survey Digital Geologic Map, DGM-106, 1 map sheet, 1:24,000 map scale.

Cook, J.P. and Youberg, A., 2013, Geologic Map of Safford 7 1/2' Quadrangle, Graham County, Arizona. Arizona Geologic Survey Digital Geologic Map, DGM-104 v.1.0, one map plate, map scale 1:24,000. Gootee, B.F, 2012, Geologic evaluation of the Safford Basin for carbon dioxide sequestration potential: Arizona Geological Survey OFR-12-01, 71 p.

Gootee, B.F, 2012, Geologic evaluation of the Safford Basin for carbon dioxide sequestration potential: Arizona Geological Survey OFR-12-01, 71 p.

Houser, B.B., 1990, Late Cenozoic stratigraphy and tectonics of the Safford, Tonto, and Payson Basins, southeastern and central Arizona *in* Gehrels, G.E. and Spencer, J.E., eds., Geologic excursions through the sonoran Desert Region, Arizona and Sonora: Tucson, Arizona Geological Survey Special Paper 7, p. 20-24.

Houser, B.B., Richter, D.H., and Shafiqullah, M., 1985, Geologic Map fo the Safford Quadrangle, Graham County, Arizona: USGS IMAP – 1617, scale 1:48,000.

Houser, B.B, Pearthree, P.A., Homburg, J.A., and Thrasher, L.C., 2004, Quaternary stratigraphy and tectonics, and late prehistoric agriculture of the Safford Basin (Gila and San Simon River Valleys), Graham County, Arizona, Friends of the Pleistocene, Rocky Mountain Cell 46th Field Conference and Arizona Geological Society Fall Field Trip, 2002: U.S. Geological Survey Open-File Report 2004-1062, 53 p.

Klawon, J.E., 2001, Upper Gila River fluvial geomorphology study, catalog of historical changes, Arizona: U.S. Department of Interior, Bureau of Reclamation, 66 p.

Klawon, J.E., 2003, Upper Gila River fluvial geomorphology study, geomorphic map, Arizona: U.S. Department of Interior, Bureau of Reclamation, 14 p., digital geologic database.

Lanphere, M.A., Champion, D.E., Christiansen, R.L., Izett, G.A., and Obradovich, J.D., 2002, Revised ages for tuffs of the Yellowstone Plateau volcanic field: Assignment of the Huckleberry Ridge Tuff to a new geomagnetic polarity event: Geological Society of America Bulletin, v. 114, no. 5, p. 559-568.

Wilson, Eldred D. and Moore, Richard T., 1958, Geologic map of Graham and Greenlee Counties, Arizona. Arizona Bureau of Mines, University of Arizona, Tucson, 1 map sheet, scale: 1:375,000.

Youberg, A., 2013, Geologic Map of the Thatcher 7 1/2' Quadrangle, Graham County, Arizona. Arizona Geological Survey Digital Geologic Map, DGM-105 v. 1.0, one map sheet, map scale 1:24,000.

Map Unit Descriptions

Gila River alluvium

Qycr — **Active river channel deposits** - Deposits are dominantly unconsolidated, very poorly sorted sandy to cobbly beds exhibiting bar and swale microtopography, but can range from fine silty beds to coarse gravelly bars in meandering reaches based on position within the channel. Clasts are lithologically diverse and typically well-rounded but may be angular to sub angular. Qycr deposits are typically unvegetated to lightly vegetated and exhibit no soil development. Qycr deposits are entrenched up to 4 m (13 ft) or more below adjacent early historical floodplain deposits depending on location, geomorphic relationship, and local channel conditions. Some of these deposits are submerged by the low-flow river channel, and remaining areas are submerged during higher seasonal or extreme flow events. These areas are subject to deep, high velocity flow and lateral bank erosion.

Qyf — **Flood channel and low terrace deposits** - Deposits are found adjacent to active channels and form lightly vegetated in-channel bars, small planar fluvial terraces within 2 m (6 ft) of low-flow river channel elevation, and recent erosional meanders outside the presently active channel. Qyf deposits are composed of poorly sorted unconsolidated sediment ranging from fine silt to cobbles and boulders depending on location in the channel at the time of deposition. Pebbles and cobbles are typically well-rounded to sub-rounded but may be sub-angular to angular. These surfaces are commonly inundated under moderate to extreme flow events and are subject to occasional deep, high velocity flow and lateral bank erosion. These deposits do not exhibit soil development but may exhibit light to moderate vegetation cover consisting of mesquite, desert broom, and grasses.

Qyf — **Historical floodplain, bar and valley-floor deposits** - Terrace deposits occupy elevations from 2 - 3 m (6 - 10 ft) above Qycr or Qyf deposits and are inset below the pre-incision historical floodplain. These surfaces are generally planar but locally exhibit bar and swale microtopography. Much of the Holocene Gila River floodplain in the Gila Valley has been utilized for agricultural purposes first by native peoples inhabiting the region and later by anglo settlers in the late 1800s. As such, much of the Gila River historical floodplain has been disturbed since before the earliest aerial photographs in the 1930s. Qy3r deposit boundaries were delineated using modern and historical aerial photo stereo pairs and mapping by Klawon (2001, 2003). The outer margins of Qy3r deposits farthest from the modern Gila River channel correspond with the Pima soil boundary from Klawon's map. This boundary is thought to represent a limit of lateral channel migration by the Gila River for the past several hundred years (Klawon, 2001, 2003). Although minimal or no soil development is present, dense grasses, shrubs, cottonwood, and small mesquite trees abound. These deposits consist of poorly sorted silt, sand, pebbles and cobbles, but most commonly the deposits are capped with fine sand and silt. Exposures reveal trough crossbedding, ripple marks, and stacked gravel deposits. Pebbles and cobbles are well-rounded to sub-angular. These deposits are prone to inundation during floods, and undercutting and rapid erosion of Qy3r surfaces is possible during lower flow events.

Qyf — **Latest Holocene to historical river terrace deposits** - Late Holocene floodplain and overbank deposits of the Gila River. Qy2r deposits are associated with broadly planar surfaces that locally retain the shape and extent of past river meanders. Qy2r surfaces are located up to 4 m (13 ft) above the modern Gila River channel (unit Qycr) and floodplain (unit Qyf1). Qy2r deposits are typically fine grained floodplain deposits with occasional pebbly to cobbly interbeds. Most Qy2r surfaces have been altered by long term agricultural use. Where undisturbed, mesquite bosque and tall grasses are present on these surfaces. The extent of Qy2r deposits throughout the map area was delineated using modern and historical aerial photo stereo pairs and mapping by Klawon (2001, 2003). The "Pima soil boundary" and "geomorphic limit" bracket Qy2r deposits. The geomorphic limit approximates a limit of surface modification by floods and lateral channel migration of the Gila River for at least the past 1,000 years (Klawon, 2001, 2003).These surfaces appear predominantly fine grained at the surface due in part to the input of organic matter and windblown dust deposition but are composed of interfingering coarse sandy to pebbly braided channels and fine sand to silty river floodplain deposits. Qy2r deposits are not subject to inundation by moderate river floods, but may be flood-prone during extreme floods. Qy2r deposits are also subject to catastrophic bank failure due to undercutting and lateral erosion during flow events where adjacent to Qycr or Qyf deposits. Distal piedmont fan deposits (unit Qy2) onlap onto Qy2r deposits although an interfingering relationship likely exits in the subsurface.

Qyf — **Late to early Holocene river terrace deposits** - Deposits associated with slightly higher terraces that represent higher elements of older Holocene aggradation periods. These terraces appear predominantly fine-grained on the surface but often exhibit coarse gravelly to cobbly beds in the subsurface. Surface features have often been historically disturbed by agriculture and extensive portions of Qy1r deposits in the Gila Valley are obscured by the towns of Safford, Thatcher, Central, Pima, and Fort Thomas. Qy1r deposits are the most laterally extensive Holocene Gila River deposits in the valley, sometimes exceeding 3.2 km (2 miles) wide. Holocene fan onlap extends out onto Qy1r deposits by as much as 2,000 m (6,560 ft) although an interfingering relationship likely exists in the subsurface. Qy1r deposits are mapped outside the geomorphic limit of Klawon (2001, 2003). Soil development is moderate and surface color ranges from 10 to 7.5 YR 4/4 although some terraces appear more reddish due to local source lithologies and clasts derived from distal fan onlap. A light dusting (incipient stage I) of calcium carbonate accumulation is evident on the undersides of some buried clasts. Qy1r surfaces stand up to 9 m (30 ft) above the active channel typically are 3 m (10 ft) higher than adjacent Qy2r surfaces.

Qif — **Low-intermediate Gila River terraces** - Qi3r deposits comprise Latest Pleistocene river terrace deposits along the Gila River. Qi3r deposits associated with the Gila River occupy lower elevations in the landscape than Qi2r deposits, from 20 - 30 m (65 - 100 ft) above the modern Gila River channel. Qi3r terraces are located up to 4 km (2.5 miles) outside the margins of the modern Gila River channel and are inset into older, higher-standing Gila River gravel-capped basin fill deposits. These deposits consist of well-rounded to subangular pebbles to cobbles of diverse lithology with cross-bedded coarse sandy interbeds. Qi3r soils are moderately developed with orange to reddish brown (7.5YR) sandy loam to clay loam argillic horizons and stage II+ calcium carbonate accumulation. Qi3r terrace surfaces are planar, often capping basin fill deposits, and are lightly vegetated by creosote, cactus, and grasses.

Qif — **Intermediate-high Gila River terraces, undivided** - Middle to late Pleistocene river terrace deposits along the Gila River. Qi2r deposits associated with the Gila River are similar to Qi3r deposits in morphology and vegetation, but occupy higher positions in the landscape, up to 50 m (165 ft) above the modern Gila River channel. Terrace surfaces are extensive and planar to moderately rounded near edges. Clast composition is diverse. Well-rounded pebbles, cobbles, and boulders are abundant in cross section while the extensive planar cap is dominantly fine grained. Surface clasts on some well-preserved Qi2r deposits exhibit mild to moderate rock varnish and weak pavement formation. Vegetation on Qi2r deposits is dominated by creosote and includes ocotillo, bunch grasses, and mesquite. Qi2r soils are moderately well developed, reddened (5 YR), exhibit clay-rich argillic horizons, with obvious clay skins and subangular to angular blocky structure. Underlying soil carbonate development is typically stage II to IV, with abundant carbonate through at least 1 m (3.3 ft) of the soil profile. This carbonate cemented cap armors Qi2r and underlying Tsy deposits from erosion. Soil development is more evident in finer grained sections. Qi2r surfaces are typically found as high-standing isolated mounds surrounded by distal fan alluvium or as elongate terraces inset into older river, fan, or basin fill alluvium. Locally, Qi2r deposits are subdivided into two members with similar morphology that occupy different positions in the landscape. Qi2r Gila River deposits are only preserved on the north side of the Gila River in the map area.

Qi6ra — **Intermediate-high Gila River terraces, older member** - Qi2ra deposits closely resemble Qi2rb deposits in morphology but occupy slightly higher positions in the landscape.

Qi6rb — **Intermediate-high Gila River terraces, younger member** - Qi2rb deposits closely resemble Qi2ra deposits in morphology but occupy slightly lower positions in the landscape.

Qir — **High standing Gila River terraces** - Qi1r deposits occupy positions in the landscape higher than Qi2r and lower than Qor deposits, up to 80 m (260 ft) above the modern Gila River channel. Qi1r deposits exhibit planar remnant caps where extensive, transitioning to broad, well rounded slopes near eroded edges. Qi1r deposits are composed of very well-rounded to well-rounded pebbles and cobbles of diverse lithology. Cross-bedded sands with pebbly stringers are interbedded throughout. Near-surface cobble beds exhibit stage III - IV calcium carbonate accumulation. Moderately to strongly calcium carbonate coated clasts or cemented aggregates of clasts mantle the flanks of Qi1r deposits, but clay accumulation is variable, probably due to poor surface preservation. Where surfaces are well-preserved, Qi1r soils exhibit reddened (5-2.5YR) argillic horizons with obvious clay skins and subangular to angular blocky structure. Underlying soil carbonate development is typically stage III-IV, with abundant carbonate through at least 1 m (3.3 ft) of the soil profile. Creosote, low grasses, mesquite, and ocotillo, especially on eroded slopes exposing the cemented carbonate horizon inhabit, Qi1r deposits. Qi1r Gila River deposits are only preserved on the north side of the Gila River in the map area.

Qor — **Very high Gila River deposits** - Qor deposits represent the oldest, highest standing Gila River deposits in the map area. These deposits are located up to 190 m (620 ft) above the modern Gila River channel. Qor deposits are composed of well-rounded to subangular indurated pebble-cobble-boulder river clasts and finer-grained river deposits. Qor deposits are typically coarse clasts lag exposed on side slopes, and are preserved near the mountain front below younger, onlapping Quaternary alluvial fan deposits and sitting on top of older basin fill sediments. Where exposed in cross-section, Qor deposits are poorly sorted, exhibiting alternating sand and pebble dominated beds with coarse cobble to boulder interbeds.

Piedmont alluvium

Qyc — **Active stream channel deposits** - Qyc deposits are composed of unconsolidated, very poorly sorted sand to cobbles in lightly vegetated piedmont channels. Channels may be flat-bottomed or exhibit bar and swale microtopography with bars composed of coarser sediments. Qyc deposits are generally devoid of vegetation and exhibit no soil development although small shrubs and grasses may be found on slightly elevated in-channel bars. Qyc deposits are lined by cottonwood and oak in near-mountain reaches and mesquite, acacia, creosote, and desert broom farther from the mountain front. Qyc deposits commonly become submerged during moderate to extreme flow conditions and can be subject to deep, high velocity flow and lateral bank erosion. Channels are generally incised .25 - 1.5 m (1 - 5 ft) below adjacent Holocene alluvium and may be incised into adjacent Pleistocene alluvium by 2 m (6.5 ft) or more.

Qys — **Low swales, tributary drainages, and weakly incised channels** - Piedmont alluvium located along active drainages including small channels, adjacent low terraces, or floodplain areas. Qy3 deposits are composed of unconsolidated, unvarnished sand, gravel, and silt deposits. Qy3 deposits may also exhibit significant cobble and boulder accumulations reworked from adjacent Qy2 and Qy1 terraces and splay deposits. Qy3 drainages are often wider, lower energy, and more heavily vegetated than the Qyc channels they drain into. In upper piedmont areas Qy3 includes active stream channels where Qyc cannot be broken out at the map scale. Soil development is generally absent or incipient on Qy3 deposits which exhibit pale buff to light brown (10 YR) surface coloration.

Qy2 — **Broad drainages and piedmont terrace deposits** - Qy2 deposits consist of terrace deposits located primarily along the flanks of incised drainages and low-relief terraces inset into Pleistocene age fan deposits. Some Qy2 deposits comprise extensive low relief alluvial fans where unconfined by older piedmont alluvium. These deposits consist of predominantly fine grained unconsolidated to weakly consolidated sediments with sub-rounded to sub-angular pebble to cobble bars on the surface and beds and lenses in cross section. Where inset into older alluvium, Qy2 deposits are planar with remnant bar and swale microtopography. Planar Qy2 terraces are typically elevated from 30 cm - 1.5 m (1 - 5 ft) above active channels. Soil development on Qy2 deposits is minor, characterized by no to incipient stage I-II calcium carbonate accumulation in the form of small filaments and medium brown (10 YR) surface coloration. Vegetation on Qy2 surfaces consists of small shrubs, weeds, bunch grass, yucca, Mormon tea, prickly pear, desert broom, and the occasional cholla. These surfaces are subject to inundation during moderate to extreme flow conditions when channel flow exceeds capacity or due to channel migration on low-relief portions of broad distal fan deposits.

Qy1 — **High standing broad piedmont terraces** - Qy1 deposits consist of planar terraces along larger piedmont drainages that are 1 - 2 m (3 - 6 ft) higher in the landscape than adjacent Qy2 terraces and eroded, remnant alluvial fan deposits on lower piedmont areas. Qy1 deposits are composed of sandy to pebbly swales with coarser unvarnished to very lightly varnished pebble to cobble bars, and partially overlie Pleistocene deposits in some areas. Near the mountain front, Bar and swale microtopography is somewhat muted by generations of vegetation mounding. Pebbles and cobbles exposed in cross section exhibit stage I-II calcium carbonate accumulation within a medium brown matrix of fine sand to silt. Some reddened clay rich aggregate and calcium carbonate coated clast inclusions have been reworked from older deposits. Qy1 surfaces are generally isolated from flooding associated with the modern drainage system although inundation may be possible during extreme precipitation and runoff events. Vegetation on Qy1 deposits is similar to that found on Qy2 deposits with the addition of creosote, whitethorn and catclaw acacia.

Qys — **Sheetflood deposits and swales, reworked basin fill deposits** - Laterally extensive, unconsolidated fine-grained alluvium in valley bottoms and mantling the lower parts of adjacent slopes on eroded basin fill (Tsy) deposits. These sediments are light brown to light tan to white in color and consist of sand, silt, clay, and gravel. Occasionally weakly channelized flow occurs but minor gradient changes or vegetation cause aggradation that leads again to sheetflow or infiltration. In valley bottoms, these deposits are primarily silt and sand beds with a small component of thin and discontinuous gravel beds. Weakly developed buried soils are common. On the toes of slopes, sandy to pebbly calcium carbonate aggregate nodules are common. Surface soil development is weak.

Qi6 — **Low-intermediate terraces and alluvial fan deposits** - Broadly planar terrace and fan deposits elevated up to 3 m (10 ft) above adjacent Holocene (Qyc, Qy3, Qy2, and Qy1) deposits. Surface soil on Qi3 deposits is mildly reddened (7.5 YR 5/4). Cobbles and boulders dominate Qi3 deposits in cross section where exposed by incised channels or roadcuts. Qi3 deposits consist mostly of locally derived clasts but may also include reworked Gila River clasts, especially towards the valley center. On broad planar Qi3 surfaces farther from the mountain front surface soil is composed of sand, silt, and small pebbles with partially buried cobbles to boulders creating remnant bar and swale microtopography. Some Qi3 deposits appear to overlie highly eroded basin fill deposits (units Tsy, Tsc, Tsf and Tsp) and are likely less than a few meters thick. Vegetation on Qi3 deposits is dominated by creosote but includes prickly pear, barrel, and cholla cactus, bunch grasses, small shrubs, whitethorn and catclaw acacia, mesquite, agave, yucca, and mormon tea.

Qi6 — **Intermediate-high Gila River terraces and fan deposits** - Broadly planar to moderately rounded cobble to boulder dominated terrace and fan deposits capping underlying basin fill deposits (units Tsy, Tsc, and Tsf). Qi2 deposits consist mostly of locally derived clasts but may also include reworked Gila River clasts, especially towards the valley center. Qi2 deposits are elevated up to 45 m (150 ft) above Holocene piedmont deposits near the mountain front and 12 m (40 ft) farther out in the valley. Qi2 deposits are broadly planar to gently rounded caps that exhibit clay rich reddened (2.5 - 5 YR 4/6) soils with calcium carbonate rinds and matrix between clasts (Stage III) where exposed in cross section. In some areas where the contact between Qi2 and underlying Tsy deposits is exposed, an erosional unconformity is evident. Vegetation on Qi2 deposits is similar to that found on Qi3 deposits although creosote is less abundant and more widely spaced. Vegetation includes prickly pear, barrel, and cholla cactus, bunch grasses, small shrubs, whitethorn and catclaw acacia, mesquite, agave, yucca, mormon tea, and ocotillo near carbonate-rich eroded edges.

Qih — **High standing relict alluvial fan remnants** - Qi1 deposits are relict alluvial fan remnants overlying Tsy basin filling sediments or bedrock that stand higher in the landscape than Qi2 and younger deposits. Qi1 surfaces are planar to well-rounded near eroded edges. Where extensively preserved, Qi1 deposits exhibit deeply incised mature tributary drainage networks and clay rich, reddened (2.5 - 5YR 3/6) soils. Qi1 deposits commonly cap and preserve underlying finer grained Tsy deposits. Coarse cobble to boulder lag derived from erosion of the Qi1 cap also covers the flanks of underlying Tsy deposits, shielding them from erosion. Qi1 deposits consist mostly of locally derived clasts but may also include reworked Gila River clasts, especially towards the valley center. Vegetation on Qi1 deposits consists of mesquite, grasses, small shrubs, prickly pear, barrel, creosote, agave, ocotillo, and oak near incised drainages.

Qo — **Alluvial Fan Deposits** - Early Pleistocene alluvial fan deposits. These deposits are the highest preserved fan surfaces in the Safford basin. Remnant Qo surface vary from planar with well rounded, eroded edges to smaller remnant surfaces of rounded ridges. Qo surfaces cap coarser old alluvial fan deposits near the mountain front (units QTa and Tcs), and finer-grained basin fill deposits (Tsf) towards the valley center. Where preserved, Qo deposits exhibit deeply incised mature tributary drainage networks and clay rich, reddened (2.5 YR 3/6) soils, strong calcium carbonate accumulation (stages III-IV), and coarse cobble to boulder lag derived from erosion of the Qo cap. Vegetation on Qo deposits consists of mesquite, grasses, small shrubs, prickly pear, barrel, creosote, and agave.

QTa — **Fanglomerate** - Very coarse, clast-supported, moderately to strongly consolidated fanglomerate composed of carbonate-cemented pebble-cobble-boulder alluvial fan deposits. This unit is found immediately adjacent to the mountain front and typically overlies pink volcanic breccia or older, finer-grained conglomerate. This unit forms high, rounded ridges, typically with no preserved alluvial surfaces or limited Qo surfaces.

Basin fill alluvium

Tsy — **Basin Fill Deposits, undivided** - Weakly to moderately consolidated silt, clay, sand, gravel and limestone deposited in basins during and after late Cenozoic faulting. Tsy deposits are generally light to medium brown to tan (7.5 YR 6/4) in color. These deposits form gently rolling, low relief hills broadly dissected by tributary drainage networks throughout the map area, and locally form prominent bluffs when overlain by more consolidated, erosion resistant Quaternary deposits. Exposures are found along major drainages and are divided into four general facies where exposures permit (units Tsc, Tsf, Tsl, Tsa). Unit Tcs is found nearer to the mountain front and represents coarser local proximal alluvial fan deposits. Unit Tsf is found towards the valley center and represents finer-grained distal fan deposits; Tsf includes playa and lacustrine deposits (unit Tsl) and axial tributary river deposits (unit Tsa) where not mapped separately. Unit Tsl represents fine-grained lacustrine and/or playa deposits, and unit Tsa represents axial tributary river deposits; both are found in the valley center. Unit Tcs grades into, or is interfingered with, Tsf; where possible, interfingered Tcs and Tsf is mapped as Tsm, basin margin deposits. Unit Tsf grades into and interfingers with Tsl, and interfingers with Tsa. Unit Tss denotes outcrops of spring deposits. The general Tsy unit is used when underlying basin fill deposits are covered by colluvium, or in areas where detailed mapping wasn't possible. Unit Tsf is equivalent to the 111 Ranch beds and Bear Springs Wash beds described by Houser (1990). These deposits are interfingering and include sediments from the Gila Mountains, the Pinaleño Mountains and Bonita Creek basin prior to the establishment of a through-flowing Gila River around 2 Ma (Houser, 1990). These deposits record a time when the Safford Basin was closed and Tertiary Lake Graham existed. Houser (1990) suggested that these basin fill deposits may be as young as late Pleistocene, however a clear erosional contact is evident between the basin fill units (Tsy, Tsc, Tsm, Tsf, Tsl, Tsa) and overlying, coarser Quaternary units (Qo, Qi1, Qi2, Qi3) suggesting that these basin fill deposits are Pliocene. Outcrops of tephra beds (magenta lines) were mapped in units Tsf and Tcs between elevations of ~ 975 m - 1150 m, possibly representing at least 3 different tephra beds. Tephra samples unfortunately did not yield datable material. Vegetation on basin fill deposits ranges from bunch grass ground cover, small shrubs, acacia, desert broom, and mesquite in lowlands to yucca, prickly pear, barrel, larger mesquite, oak, and agave on high standing Tsy deposits.

Tsc — **Basin Fill Deposits, coarse-grained** - Coarser sand-pebble-cobble alluvial fan deposits near the mountain front. This unit includes beds of dark gray sandy pebble alluvial fan conglomerate with varying amounts of carbonate in the form of nodules and root casts, with interbeds of paleosols. Tsc becomes finer-grained farther away from the mountain front and grades into, or interfingers with, unit Tsf. The observable interfingering relationship is mapped as Tsm.

Tsm — **Basin Fill Deposits, interbedded margin sediments** - Interbedded basin margin deposits composed of dark gray sandy pebble alluvial fan conglomerate (unit Tsc) and tan sand to silty sand unconsolidated beds and consolidated flaggy sandstone beds of distal alluvial fans (unit Tsf). Where Tsm is mapped, the interfingering relationship between Tsc and Tsf is observable, otherwise this relationship if represented by a single gradational line.

Tsf — **Basin Fill Deposits, fine-grained** - Fine-grained sand, silt, mud, clay and limestone deposits. This unit is correlative to the 111 Ranch and Bear Springs Wash beds (Houser, 1990). Unit Tsf is composed of finer-grained distal alluvial fan deposits of interbedded sand, silt, mud, clay and limestone with sequences that often repeat. Beds in these deposits include tan, massive (5-50 cm) to thinly bedded (< 1-5 cm) to laminar, well-sorted fine sand and very fine sand; tan lenticular and cross-bedded sandstone; brown blocky massive silt to silty clay (5-50 cm); tan, unconsolidated sand to silty sand beds and consolidated, flaggy sandstone beds (< 5 cm); reddish-tan clay and mud over thinly bedded (2-10 cm) limestone beds; minor, thin limestone beds and stringers; and multiple tephra beds (~5 cm – 1 m). Limestone beds in this unit are variable and may include groundwater precipitates, carbonate mudflats and/or short-lived shallow water precipitates. Unit Tsf represents distal alluvial fan environments grading into basin-center lacustrine or playa environments (Tsl). Unit Tsf interfingers with unit Tsc toward the mountain front, grades into and interfingers with unit Tsl towards the basin center, and interfingers with unit Tsa.

Tsl — **Basin Fill Deposits, lacustrine** - Very fine-grained clay, mud, silt, sand and limestone beds. Unit Tsl includes green conchoidal clay beds; greenish well-sorted fine to medium unconsolidated sand; and greenish, consolidated, ledge-forming (~10 cm) well-sorted medium to coarse sandstone containing tiny fragments of tan clay rip-up clasts. The greenish beds are interbedded with brown massive silt and clay; finely laminated, very well-sorted very fine sand; varved silt, and reddish tan clay and mud over thinly bedded (2-10 cm) limestone beds and limestone stringers. Limestone beds in this unit are variable and may include groundwater precipitates, carbonate mudflats and/or short-lived shallow water precipitates. Secondary evaporative minerals are common. Clay samples collected and analyzed from this unit yielded limited ostracod valve fragments that were not abraded or overgrown with secondary carbonate (sample JB17-LHW-2) and a coquina of Cypridels beaconensis with all ages represented (sample JB17-LHW-3), both of which represent an aquatic environment (Jordan Bright, written communication). Unit Tsl represents lacustrine environments, and may also represent playa environments depending on the climate. Much of unit Tsl may have been eroded and removed by the modern Gila River.

Tsa — **Basin Fill Deposits, axial basin deposits** - Very fine-grained sediments representing basin parallel axial tributary river deposits. Unit Tsa includes tan, very well-sorted very fine sand with stringers of consolidated thin cross-bedded or lenticular sandstone; large scale (>1m) cross-bedded channel deposits of very fine and fine sand; massive to finely laminated, flaser bedded, dark reddish-brown muds; and brown prismatic clayey silt beds. Ripples, climbing ripples, symmetrical ripples and soft-sediment deformation features can be found in the sand and silt beds. Much of unit Tsa may have been eroded and removed by the modern Gila River. Unit Tsa represents axial basin channel and floodplain deposits, and may be related to the ancestral Gila River. Tsa interfingers with unit Tsf. In areas where Tsa may be present but is covered by colluvium, unit Tsf or Tsy is mapped.

Tss — **Spring deposits within the Basin Fill** - Localized spring deposits within basin fill deposits. Most are limestone but at least one is an amorphous silica breccia, likely from a hot spring source.

Tcg — **Conglomerate** - Matrix supported, carbonate-cemented, sandy-pebble to cobble-boulder conglomerate found near the mountain front typically exposed in channels and underlying the coarse-grained basin fill unit (Tsc) and occasionally found under unit QTa. This unit represents older Tertiary alluvial fan deposits.

Bedrock

QTb — **Basalt** - Locally includes tuff and agglomerate (from Wilson and Moore, 1958).

Ta — **Andesite** - Includes tuff and agglomerate (from Wilson and Moore, 1958).

Other units

d — **Disturbed ground** - Heavily disturbed or altered ground due to extensive excavation, construction of earth dams, and municipal development.

Qtc — **Talus and colluvium** - Unconsolidated talus and colluvium on moderate to steep slopes. Very poorly sorted, angular to subangular gravel clasts.

Correlation of map units

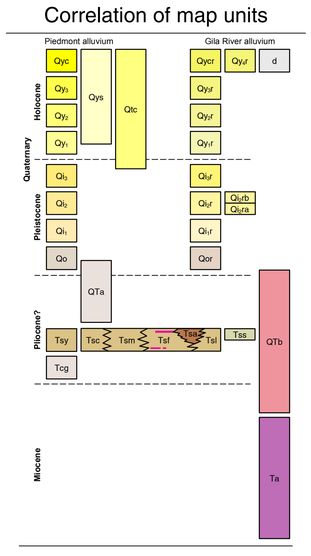

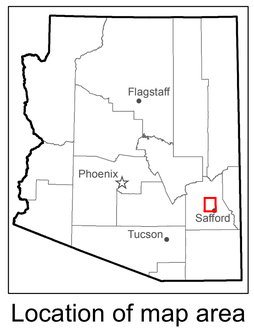

Location of map area

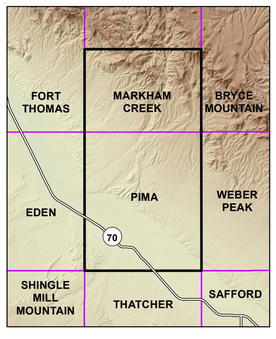

Arizona Geological Survey
1955 East Sixth Street, PO Box 210184
Tucson, AZ 85721
(520) 621-2470
www.azgs.az.gov

THE UNIVERSITY OF ARIZONA