OPEN-FILE REPORT OFR-11-01

Arizona Geological Survey
www.azgs.az.gov

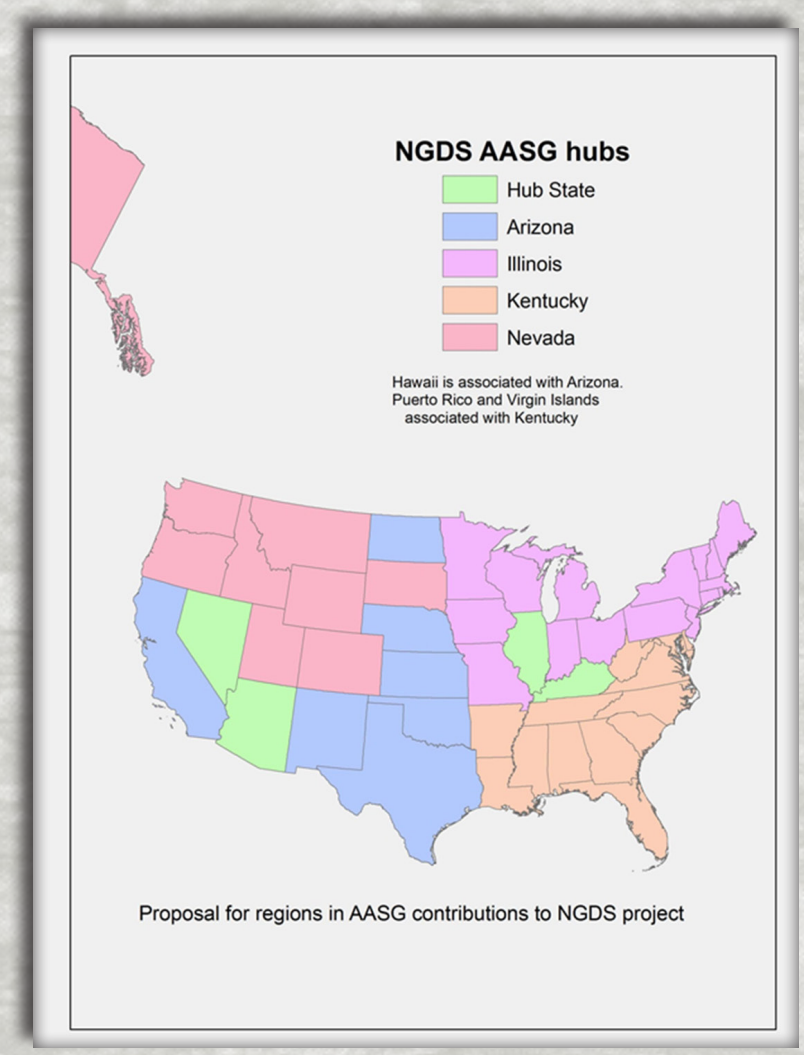

State Geological Survey Contributions to the National Geothermal Data System: Annual Report 2010

M. Lee Allison and Stephen M. Richard

January 2011

ARIZONA GEOLOGICAL SURVEY

State Geological Survey Contributions to the National Geothermal Data System: Annual Report 2010

Accomplishments through September 30, 2010

AASG
GEOTHERMAL DATA

Arizona Geological Survey

Open-File Report

OFR-11-01

State Geological Survey Contributions to the National Geothermal Data System: Annual Report 2010

Accomplishments through September 30, 2010

Prepared by

Arizona Geological Survey

Under U.S. Department of Energy award DE-EE0002850

M. Lee Allison & Stephen M. Richard,

Principal Investigators

This research was supported primarily by the U.S. Department of Energy's Geothermal Technology Program an Office of Energy Efficiency & Renewable Energy program, under Grant No. DE-E0002850.

Executive Summary

The project achieved its primary goals and milestones during FY2010, including completing contracts with 45 subcontractors representing geothermally-relevant data resources in all 50 states. Statements of Work for the first project year have been received, reviewed by the project Science Advisory Board, and approved for 20 of the subcontractors, with the remainder nearing completion. The management and financial team was assembled at AZGS and put into full operational mode.

The Management and Science Advisory Boards were established and have been carrying out their duties successfully. The Technical Advisory Board was established but not fully implemented pending resolution of significant changes in the Boise State University NGDS project.

Supplemental funding of $4.1 million for new data acquisition was budgeted and proposals solicited from project participants for competitive awarding of funds.

The technical team developed a document repository implemented with the Drupal content management system, and available for project partners to use, implemented an online Metadata Wizard tool to create USGIN-conformant metadata for the BSU NGDS project, prepared an implementation plan for the 3 regional IT hubs, and made significant progress on implementing a catalog service for registration and discovery of data available to the NGDS.

Demonstration data services have been deployed for Arizona and California (hosted by Arizona) heat flow, active faults, and thermal springs (see http://services.azgs.az.gov/ArcGIS/rest/services/ for links to current service demos).

AZGS team members gave 23 presentations about the project, published one formal paper, submitted two manuscripts for chapters in a Cambridge University Press book on "Geoinformatics," and gave 5 news media interviews about the project.

The project website, www.stategeothermaldata.org had a soft launch and we will transition from the Google Groups site, AASG Geothermal Data, to the web site in FY2011.

Highlights

The project was formally launched May 4, 2010, with a subsequent kick-off meeting with all participants.

The SOPO, project plan and schedules have been defined.

All 50 states are now represented in the project. North Dakota, Virginia, and Arizona surveys are handling data from the five states that could not formally participate.

Milestones:

- Completed subcontracts for 44 states.
- Established process for annual submittal/approval of SOWs to ensure deliverables are defined, committed to and delivered
- Statement of Work Template for subcontractor's prepared and distributed.

- Statements of Work for Year 1 received for 42 project partners, and the remaining two are near completion.
- Established Science Advisory Board (SAB) & documented duties and obligations
- Science Advisory Board met 3 times to review submitted Statements of Work and made recommendations to the project management
- Established Management Advisory Board & documented duties and obligations
- Technical Advisory Board Chair established with documented duties and obligations
- Management Advisory Board approved distribution plan for supplemental funding for SOPO Task 1.4 to acquire new data
- Plans for the regional server and training hubs were developed in collaboration with the hub organizations (NV, KY, IL).
- Preparation for AZGS to serve as data hub
    - Network rewiring, firewall and switch upgrades
    - Server upgrades and move to archival quality server room at AZGS
    - Scanners acquired to digitize AZ & CA data collection
- Supplemental funding of $4,058,277 was approved by DOE, to focus on new data acquisition (SOPO Task 2.4)
- Management Advisory Board approved distribution plan for supplemental funding for SOPO Task 1.4 to acquire new data
- Supplemental funding proposals for new data acquisition received from 18 states, totaling $5.13 million in requests.
- Key staff positions at AZGS were filled and hiring continues.
- Initiated collaborations for data sharing with the Western Regional Partnership (www.wrpinfo.org)
- Participated in Microsoft Research workshops resulting in agreement to incorporate GIN-NGDS needs in new World Wide Telescope-Earth free visualization software
- A Google Groups website "AASG Geothermal Data," was set up for communications among project participants, and includes project reports, announcements, presentation materials, forms, etc.
- A project website, www.stategeothermaldata.org had a soft launch. The Google Group site resources and functions will be transferred in stages to the website.

Technical Accomplishments

Technical work initially focused on preparing guidance for the statements of work from project partners, planning for regional hub deployment, and presentation of technical approach for the project launch and partner meeting in Washington DC (5/17-18) (Attachment 10)

Based on the content presented for contribution to the geothermal data system in the State Geological Survey statements of work, a framework of 30 data item types was defined to scope the service architecture for data delivery. (Attachment 7)

Recommendations for metadata content to register resources in the system catalog were developed and distributed (see http://lab.usgin.org/node/370) for discussion and adoption (Attachment 9).

An OGC Catalog service (CSW) implementation was installed, configured and tested as a prototype for the system catalog for registering and locating resources (http://catalog.usgin.org). This prototype uses the GeoNetwork Opensource project implementation and the metadata content recommendations.

A summary System Architecture memo was prepared and distributed to partners for review (Attachment 6).

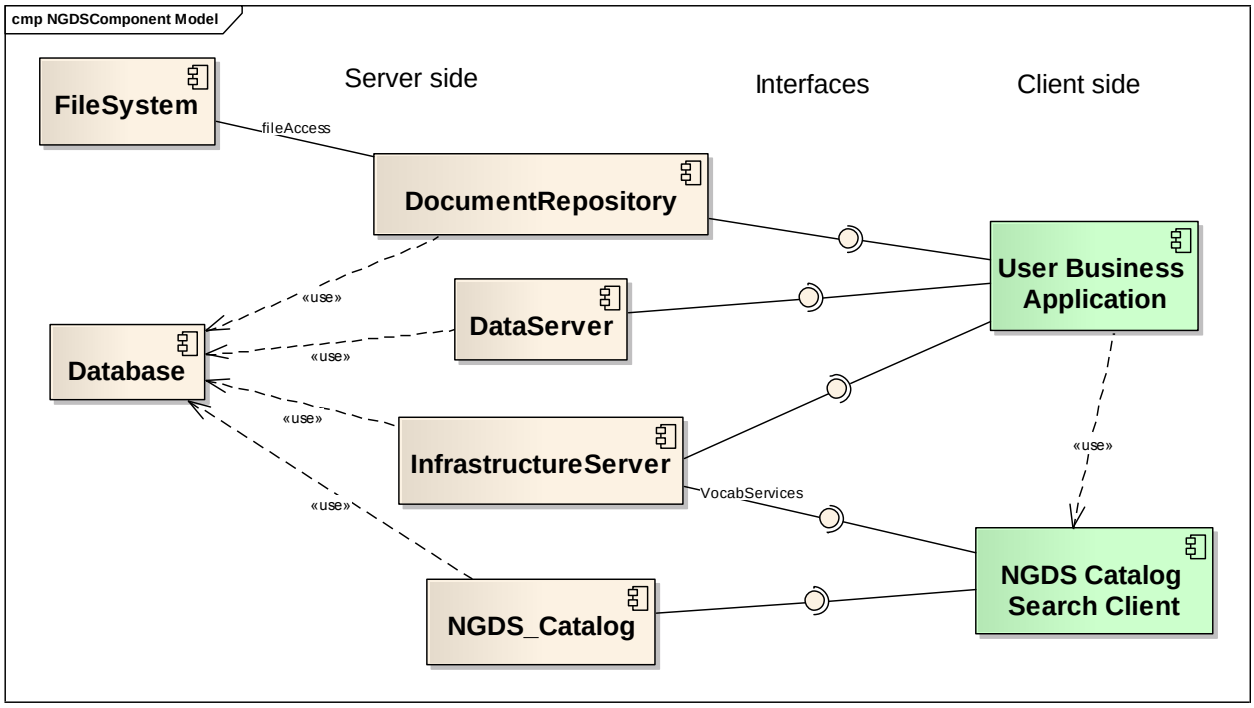

Figure 1. NGDS functional components (8-8-2010)

Regional hub deployment plans were agreed on in a phone conference with Hub Partners (KY, IL, NV, AZ) on June 25 (Attachment 5).

A template for an online document repository was built and deployed at AZGS (www.repository.azgs.az.gov), and made available to participants to use. AZGS added 30 years of its geothermal publications to the site for free downloading, as well as hundreds of other geologic reports.

Several demonstration web services have been set up for testing, including geologic map services with data from AZGS, Utah Geological Survey, and California Geological Survey, as well as Arizona geothermal data obtained from the Great Basin Center for Geothermal Energy and GeoHeat center.

Student technicians were hired and trained to scan and digitize Arizona and California data for the project, and develop metadata.

With support from Co-PI Steve Richard, the International Union of Geological Sciences (IUGS) CGI Interoperability Workgroup started a new task to develop xml schema for flat file (simple

feature) gml views of GeoSciML to facilitate use with layer-based GIS clients (like ArcGIS) that will support the project.

Management and Operations Accomplishments

Project launch kick-off meeting
The DOE project kick off meeting was held on May 4, 2010 via phone conference.

The partner meeting with all project members was held May 17, 2010 in Arlington VA. About 20 participating organizations were represented in person, another 38 representatives joined by web conference.

State participation
All 50 states are now represented in the project (Attachment 11). The Virginia Geological Survey brought Virginia Tech professor John Costain aboard to oversee their role in the project. Dr. Costain is a well-known, long-time geothermal researcher who amassed vast amounts of geothermal data for numerous areas in the Eastern U.S., including Virginia, Maryland, Delaware, and Georgia. After discussions with those state geological surveys, Virginia agreed to take the lead in assembling data for their states.

Dr. Will Gosnold, who leads our efforts for North Dakota and Minnesota, has similar expertise and access to geothermal data in Nebraska. He has the support of the Nebraska Geological Survey to serve as the lead on assembling data for that state into NGDS.

NGDS Roundtable
The project team participated in a half day roundtable in Arlington VA, with the other projects cooperating in the NGDS. As a result of the discussions, AZGS prepared and circulated a draft outline for creation of a Technical Coordinating Council among the projects (see more below).

Management Advisory Board
The plan for the Management Advisory Board was finalized in consultation with the Executive Committee of AASG, and implemented (Attachment 2).

Membership:

AASG Past-President, David Wunsch, New Hampshire
AASG President, Jim Cobb, Kentucky
AASG Vice President, Harvey Thorleifson, Minnesota
NGDS Principal Investigator, Walter Snyder, Boise State University, Idaho
DOE-GTP, Ava Coe, Colorado

Science Advisory Board
The proposed outline of duties and organization for the Science Advisory Board was approved by the Management Advisory Board (MAB). Project participants were invited to nominate members to serve on the SAB (Attachment 4).
The membership was approved by the MAB as follows:

Chair- Rick Allis, Utah Geological Survey
John Costain - VA
Dave Norman - WA

Arlene Anderson - DOE
Lisa Shevenell - NV
Ed Deal - MT
Chacko John - LA

The board met face to face in Tucson July 21, and by phone conference Aug. 12 and Sept. 8 to review and make recommendations on subcontractor statements of work.

Subcontracts

Subcontracts were written for each of the participants and are in various stages of negotiation. Statements of Work are being developed with each participant that will be added to their subcontracts to finalize them.

AZGS developed a Statement of Work template to facilitate and standardize how each participate describes their work plans for the coming year.

The Science Advisory Board reviewed each SOW and made recommendations to the project management about the data priorities, quality assurance plans, duplication, amounts of data and data attributes, and other factors the Board decides upon. Forty of 45 subcontracts were finalized with approved SOW's by the end of September.

Hiring progress

William Meade accepted the position of IT Manager for the project.
Catherine Martinez-Wells joined as Project Coordinator.
Adreanna Madero joined AZGS as an accounting technician to support the project.
Dr. Averill Cate and Lund Wolfe were hired as IT Specialists to develop web services. We were unable to find a qualified candidate for a third IT position and are looking at ways to broaden our search.

Two students and a retired professional were hired part time to scan and digitize AZ and CA data files and enter metadata to the AZGS catalog.

Technical Advisory Board

We prepared and circulated a draft outline (Attachment 1) for a Technical Coordinating Council among all the NGDS projects, based on a formal session and informal discussions at the DOE-GTP Peer Review. The outline of duties was adopted by Boise State University for their NGDS project but with different responsibilities and membership than proposed. It was renamed the Technical Working Group (TechWG).

AZGS proposed using the proposed council to serve the dual role as the TAB for our project as well but that was rejected by the BSU NGDS Principal Investigator. We were advised to create our own separate technical advisory board.

We subsequently adopted the plan that we originally circulated, with Dr. David Cuyler from Sandia NL (now on loan to DOE-GTP) as chair. Sky Bristol from USGS was appointed and other appointments were in progress, to be completed in 4Q, 2010.

Collaboration

A draft Memorandum of Understanding was prepared and submitted to David Blackwell at Southern Methodist University, with the goals of collaborating to avoid duplication of effort, especially in regards to data in Texas, and clarifying each organization's role in the NGDS.

There are continued discussions concerning the role of the Bureau of Economic Geology in the respective projects.

Supplemental funding
The original compilation of data needs from the states during the preparation of the funding proposal in 2009 amounted to funding needs of about $25 million. This included priorities for new data acquisition from some of the states. However, given the budget available at the time, the team reduced the request by about 40%. We subsequently requested additional funding in the event it became available, to better meet the opportunities and needs identified by the project participants.

DOE-GTP approved supplemental funding of $4,058,277, principally to enhance Task 2.4 of the SOPO on new data collection.

The project management drafted a plan on allocating these new funds via competitively chosen Supplemental Statements of Work from the project participants. The plan was submitted to the Management Advisory Board for consideration (Attachment 3) and adopted with minor revisions (Attachment 8).

A draft budget was approved by the MAB for the Supplemental funds, allocating 90% of the total amount to sub-awardees for new data collection.

Communications, outreach, technology transfer (Task 13.4)

Web site development – www.stategeothermaldata.org
The project has been using a Google Groups site for team communications, including posting of relevant documents, presentations, and guidelines. The project web site was developed using a content management system structure. A prototype site was demonstrated in late June, and a soft roll out of the site took place in early Q3.

The site has a separate login area for project participants to handle contractual and financial information. All the materials on the currently active Google Groups site will be copied to www.stategeothermaldata.org, and we will shift focus from the Google Group to the project web site.

The GIN development web site, http://lab.usgin.org, continues to be a primary source of information and forum for developers to review and comment on system standards, protocols, and procedures.

Workshops and Conferences

Governor's Renewable Energy Forum, April 15, 2010 Scottsdale, AZ [Allison – organizing committee] – funded by State of Arizona [Allison]

Workshop on Working towards a National Geoinformatics Community (NGC), September 23-24, 2010, Denver, CO [Allison – organizing committee] – funded by NSF

AZGS exhibit booth at 2010 Geothermal Resources Council annual conference and expo, Sacramento, CA. A multi-screen monitor display system was ordered and deployed at this meeting to showcase the potential of the NGDS to users through real-time demonstrations.

Publications

Submitted report on "Metadata Crosswalk: BSU NGDS Repository – USGIN Recommendations" to BSU team to harmonize efforts.

Allison, M. Lee, Stephen Richard, Linda Gundersen, & Ian Jackson, 2010, "U.S. Geoscience Information Network (GIN) and Convergence towards Global Data Integration in the Geosciences," Microsoft Environmental Research Workshop 2010, Redmond, Washington July 14, 2010, p4, Proceedings, 48p, http://research.microsoft.com/en-us/events/environmentalresearch2010/erw2010.pdf

Allison, M. Lee, Linda C. Gundersen, Stephen M. Richard, in review, Geoinformatics in the Public Service: Building a Cyberinfrastructure Across the Geological Surveys, in "Geoinformatics," R. Keller & C. Baru, eds, Cambridge University Press.

Richard, Stephen M., Ryan Clark, and Wolfgang Grunberg, in review, Application of the U.S. Geoscience Information Network to deploying a National Geothermal Data System, in "Geoinformatics," R. Keller & C. Baru, eds, Cambridge University Press.

Presentations

Allison, M. Lee, "AASG Update," AIPG Mid-year Board Meeting, February 12, 2010, Tucson, AZ

Allison, M. Lee, "AZGS Update," AIPG Arizona Chapter Annual Meeting, February 13, 2010, Tucson, AZ

Allison, M. Lee, "Towards a Global Data Network for the Geosciences," SME Environmental Division scholarship luncheon, SME Annual Meeting, March 2, 2010, Phoenix, AZ

Allison, M. Lee, "Building a Global Data Network for the Geosciences," Project Management Institute, Tucson Chapter, dinner meeting, March 9, 2010, Tucson, AZ

Allison, M. Lee, "Geothermal Energy Potential in Arizona," Black Canyon City Rockhounding Group, Black Canyon City, AZ, April 15, 2010

Richard, Stephen, "Web services to assemble pieces of a geoscience information network," U.S. Geological Survey seminar, Menlo Park, CA, April 15, 2010

Allison, M. Lee, "Everything Digital, Online, and Integrated," Arizona Geological Society, Tucson, AZ, May 4, 2010

Allison, M. Lee, “Data Integration in the U.S.,” *OneGeology Initiative Roundtable*, European Geophysical Union Annual Conf., Young Earth Scientists (YES) Network, Vienna, Austria, May 7, 2010 by webcast

Allison, M. Lee, “State Geological Survey Contributions to the National Geothermal Data System,” Project Partners Meeting, Arlington, VA, May 17, 2010

Allison, M. Lee, “Data Integration for the National Geothermal Data System,” DOE-NGDS Roundtable, Arlington, VA, May 17, 2010

Allison, M. Lee, “State Geological Survey Contributions to the National Geothermal Data System,” US Dept. of Energy Geothermal Technologies Program Peer Review, Arlington, VA, May 18, 2010

Allison, M. Lee, organizer and moderator, “Geothermal Breakout Session,” AASG Annual Meeting, New Brunswick, NJ, June 30, 2010

Allison, M. Lee, “State Geological Survey Contributions to the National Geothermal Data System,” AASG Annual Meeting, New Brunswick, NJ, June 30, 2010

Clark, Ryan, Stephen Richard, and Wolfgang Grunberg, “The National Geothermal Data System: The Geoscience Information Network in Action,” Digital Mapping Techniques Workshop, Sacramento, CA, May 17, 2010, http://lab.usgin.org/sites/default/files/group/file/u6/NGDSPoster.pdf

Allison, M. Lee, “Overview of the NGDS,” Arizona Geographic Information Council, Data Committee, [briefing and demo], Phoenix, AZ, July 9, 2010 [by web conference]

Allison, M. Lee, "AZGS Contributions to the NGDS," NGDS Project Annual Meeting, Salt Lake City, UT, August 16, 2010

Allison, M. Lee, "State Geological Survey Contributions to the NGDS," NGDS Project Annual Meeting, Salt Lake City, UT, August 16, 2010

Gabe Lovasz, Mike Hamilton, Allison, M. Lee, "GIS Committee Report," Western Regional Partnership, Principals Meeting, Albuquerque, NM, August 17, 2010

Allison, M. Lee, “State Geological Survey Contributions to the National Geothermal Data System,” AASG Annual Meeting, New Brunswick, NJ, June 30, 2010

Allison, M. Lee, “A Digital Revolution in the Geosciences,” Association of Engineering & Environmental Geologists (AEG), July 8, 2010, Tucson AZ

Allison, M. Lee, Stephen M. Richard, Ryan Clark, and Wolfgang Grunberg, "The National Geothermal Data System: An Implementation of the Geoscience Information Network," Webservices Blast, 2010 USGS Community for Data Integration Workshop, Denver, CO, August 10-13, 2010

Allison, M. Lee, Stephen Richard, "Geoscience Information Network Contributions to the National Geothermal Data System," NGDS Annual Meeting, Boise, ID, August 16, 2010

Scheduled presentations (post- Sept. 30, 2010)

Allison, M. Lee, Stephen Richard, Linda Gundersen, & Ian Jackson, 2010, "U.S. Geoscience Information Network (GIN) and Convergence towards Global Data Integration in the Geosciences," Geological Society of America Annual Meeting, Denver, CO, October 31, 2010

Allison, M. Lee, and Stephen M. Richard, 2010, "State Geological Survey Deployment of the National Geothermal Data System," invited presentation, Geological Society of America Annual Meeting, Denver, CO, November 2, 2010

Allison, M. Lee, Stephen M Richard, Ryan J. Clark, Wolfgang Grunberg, 2010, Application of the U.S. Geoscience Information Network to deploying a National Geothermal Data System, American Geophysical Union Fall Meeting, San Francisco, CA, Dec. 17, 2011

Gundersen, L., Whitmeyer, S.J., Walker, D., Allison, L., Babaie, H., Cervato, C., Fils, D., Richard, S.M., Arrowsmith, R., submitted, New Initiatives in the Development of a National Geoinformatics Community, American Geophysical Union Fall Meeting, San Francisco, CA, Dec. 15, 2010

News media interviews and coverage

Matthew DeMerritt, ESRI Arc User News, April, 2010

Steve Ayers, *Verde Valley News*, Prescott, AZ, May 10, 2010

Pam White, KUAZ-KUAT FM, Tucson, AZ, May 10, 2010

Jonathan DuHamel, *Wry Heat* blog column, Tucson Citizen, Tucson, AZ, May 10, 2010

Anne Marie de Grosbois, Assistant Editor, August, 2010, "Emerging cyberinfrastructure for the Earth sciences forged by the US GIN project: http://usgin.org and http://lab.usgin.org," *Environmental Earth Sciences*, , Springer-Verlag, August, 2010, http://www.springerlink.com/content/p14421645w561555/fulltext.pdf, Environ Earth Sci (2010) 61:1763–1765, DOI 10.1007/s12665-010-0693-1

Plans for FY2011

Management, Administration, and Reporting Plans

Finalize all contract revisions and SOWs with participants

Review supplemental funding requests and allocate awards, negotiate supplemental SOWs
Set up tracking system for progress of deliverables
Finish filling all positions in AZGS

Quarterly and annual reporting
Ongoing staff meetings and project planning/review discussion

Coordination among participants, collaborators, NGDS, and stakeholders
MOU in place with SMU project
Summary document with specifications for services made available
Web site with specifications and discussions edited and cleaned up for archival preservation

Technical Plans

- January -- Catalog service online in production
- February-- Implement Technical Advisory Board
- Feb-April -- focus on data service development and deployment with data from AASG partners. Develop and adopt community-based content models (schema) for all data types offered by AASG partners and post templates on state geothermal data website. Evaluate and test sample data sets from state partners.
- April -- Preliminary borehole, active fault, and heat flow data sets from three states delivered, tested, posted
- May -- Hubs operational for hosting of WMS, WFS and document repository services
- June – Take delivery of year 1 deliverables. Anticipate considerable variability in when subs will actually deliver
- July -- SAB meet to review year 1 deliverables, and submitted year 2 SOWs

Technology Transfer Plans
An exhibit booth was scheduled at the 2010 Geological Society of America (GSA) annual meeting in Denver, CO, to demonstrate system applications.

Plan to exhibit and offer short courses at 2011 GRC, GSA, and American Geophysical Union meetings.

Formalize partnerships with DataOne, Arizona state agencies, Ground Water Protection Council – Interstate Oil & Gas Compact Commission, Western Regional Partnership, and CUAHSI-HIS.

Pursue cooperative web services development with Microsoft Research.

Investigate partnerships through the Federation of Earth Science Partnerships (ESIP), IRIS Data Management Center.

Continue active role in development of the National Geoinformatics Community (NGC).

Work with Organization for the Advancement of Structured Information Standards (OASIS) on developing open source standards in the geothermal field.

Attachments

Attachment 1**,** "Draft Outline for an NGDS Technical Coordinating Council", May 26, 2010

Attachment 2**,** "Management Advisory Board" plan, June 2, 2010

Attachment 3**,** Memo to Management Advisory Board, "Procedures and guidelines for distribution of supplemental funding," [most recent version of July 2, 2010 attached]

Attachment 4**,** "Science Advisory Board" plan, [most recent version of July 6, 2010 attached]

Attachment 5, Role of Hubs in AASG Contributions to NGDS Project

Attachment 6, System Architecture in Geoscience information system

Attachment 7, AASG Feature Definition

Attachment 8, Procedure and guideline for distribution of supplemental funding, August 5, 2010

Attachment 9, DOE NGDS II Minimum Metadata Reporting Concepts

Attachment 10, Instructions for AASG-NGDS Statement of Work

Attachment 11, Participants in project

Attachment 1
"Draft Outline for an NGDS Technical Coordinating Council", May 26, 2010

Draft Outline for an NGDS Technical Coordinating Council

Proposal
Establish a Technical Coordinating Council (TCC) among the projects that are funded to build and deploy the National Geothermal Data System

Purpose
To coordinate activities of NGDS development projects lead by Boise State University, the Arizona Geological Survey, Southern Methodist University, and the U.S Geological Survey in order to ensure efficient and effective design, deployment, and population of the NGDS.

Tasks
Promulgate plans and make recommendations to project managers on technical aspects of NGDS, including:

- Use cases to guide system development
- Priorities for technical development based on adopted use cases
- Adoption of specifications, including data and metadata content models, interchange formats, and service profiles
- Adoption of controlled vocabularies and ontologies for data integration
- Adoption of conformance and quality assurance tests and metrics

Identify possible duplication of effort or incompatible component development and recommend solutions to maximize development efficiency and effectiveness
Identify emerging best practices

Authority
The TCC is intended to promote agreement and consensus on technical issues facing NGDS. Recommendations will be voted on by the voting members, and adopted by simple majority of the membership.
AZGS anticipates adopting the TCC as Technical Advisory Board for its project.
Recommendations of the TCC are not binding without agreement by affected project PIs.

Membership Voting membership includes one technically qualified representative from each project engaged in building or deploying NGDS. Proposed membership:

- Boise State University - Christian Loepp
- Arizona Geological Survey – Stephen Richard
- U.S. Geological Survey – tbd
- Southern Methodist University/Siemens – Fabian Moercher
- U.S. Dept. of Energy/Sandia National Laboratory – David Cuyler [Chair]

Additional non-voting members from the participating institutions may participate in TCC discussions, serve on subcommittees or working groups, or provide support to TCC. Non-voting members from outside projects may participate in committee or subcommittee discussions.

Working process The TCC will maintain a shared development calendar accessible to council members, project PIs, DOE program managers, and others at the discretion of project PI's.

Each council member will keep the calendar up to date, showing current development activity, development target dates, and future development plans as they evolve. The TCC will schedule telephone conferences of the members as necessary. Voting on recommendations will be recorded and documented by posting on the geothermaldata.org web site.

Recommendations adopted by the council will be posted on www.geothermaldata.org. PI's intending to adopt recommendations will notify the community by adding a statement to that effect with the posted recommendation on www.geothermaldata.org.

Attachment 2
"Management Advisory Board" plan, June 2, 2010

State Geological Survey Contributions to the National Geothermal Data System

A DOE-GTP funded project of the Association of American State Geologists, managed by the Arizona Geological Survey

Management Advisory Board

From the proposal to DOE: *A Management Advisory Board will be set up with members appointed by the President of AASG, in consultation with the project PI's. Most are expected to be members of AASG. However, Dr. Walter Snyder, PI of the NGDS project, has agreed to serve on the MAB. Duties of the MAB are to effect full engagement of AASG and its members in the timely conduct of the project goals and deliverables. The MAB will meet at least twice a year, in conjunction with the AASG Liaison Meetings in Washington DC. By combining meetings, we will keep travel costs down and assure greater attendance. Holding the MAB meetings with the AASG Liaison Meetings will allow other State Geologists to participate, providing project updates and discussing issues. The Washington DC location also offers opportunities to readily interact with DOE program officers.*

The MAB can also be convened at the AASG Annual or Mid-year meetings, if needed. Much of the regular business of the MAB will take place electronically during the year.

Duties:
Review progress and advise Project Management team on goals, priorities, deliverables, and accomplishments
Review and advise on Project Managements actions in response to Science Advisory Board and Technical Advisory Board recommendations
Review or recommend changes to meet AASG goals and project obligations
Help effect full engagement with AASG members and other participants
Advice and consent on members of the project Science Advisory Board

Members:
AASG President James Cobb - Chair
AASG Vice President Harvey Thorleifson
AASG Past-President David Wunsch
Dr. Walter Snyder, National Geothermal Data System, Boise State University, Boise Idaho
Ava (Norman) Coy, DOE Geothermal Technologies Program, Golden CO

Meetings: twice a year at AASG Liaison, with briefings at other AASG meetings, and tele- or web-conferences as needed
AASG Annual Meeting, June-July, 2010, New Brunswick, New Jersey
AASG Liaison Meeting, Fall, 2010, Washington, DC (and then at subsequent Liaisons)

Attachment 3

Memo to Management Advisory Board, "Procedures and guidelines for distribution of supplemental funding," [most recent version of July 27, 2010 attached]

MEMORANDUM

July 27, 2010

TO: AASG NGDS Management Advisory Board
CC: Rick Allis, Chair, AASG NGDS Science Advisory Board

FROM: M. Lee Allison, Principal Investigator
Stephen M. Richard, Co-Principal Investigator
Catherine Martinez-Well, Program Manager

RE: Procedures and guidelines for distribution of supplemental funding

The DOE Geothermal Technologies Program has responded to our request to provide supplemental funding to our project, "State Geological Survey Contributions to the National Geothermal Data System, " principally to expand on Task 2.4 (below) in the project's Statement of Project Objectives (SOPO) to acquire new data for inclusion in NGDS. DOE has agreed to provide us an additional $4.058 million to the project by adding it to the $2 million supplement that was added to the original award of $15.79 million to cover the cost of bringing additional states aboard. This brings the total supplement to $6.058 million and the total DOE-funded amount to $21,858,224.

We request your advice on procedures and guidelines on managing the additional funding of $4.058 million

The project executive team makes the following recommendations for your consideration:

1. AZGS will release a request for a Supplemental Statement of Work from project participants in addition to the one currently being prepared
2. The Supplemental SOW will be primarily for the collection of new data but must include addition of all new data into NGDS
3. Supplemental SOWs will use the primary SOW format already in use, but with an additional narrative allowed to explain and justify the need for the proposed new data acquisition
4. Funding requests can be for periods of 1 to 3 years
5. The Science Advisory Board will review the Supplemental SOWs and make recommendations on the work plans and funding levels to the Principal Investigators
6. The PI's will approve the Supplemental SOWs after consultation with the MAB

Questions we pose to the MAB, assuming the above proposal is adopted in its general form:

1. How much time do participants need to prepare Supplemental SOWs?
2. Should there be a cap on the supplemental amount requested by each participant? If so, how much?
3. Should we identify priorities for new data or let each participant make the case for their specific needs?
4. How extensive should the narratives be in the Supplemental SOWs?
5. Should we limit the number of projects in order to fund more significant data collection projects?
6. What considerations for NEPA compliance need to be considered? Will classification of a project in the budget under construction require NEPA monitoring?

Excerpt from Statement of Project Objectives (SOPO)

Subtask 2.4 Collection of new data

Purpose: Make new measurements, calculations, and interpretations, and collect samples.

Approach: Each state will assess the extent, usefulness, and nature of data to determine what gaps are most critical to fill.

Milestone: Data will be collected incrementally and continually. Specific product delivery schedules will be based on SAB established priorities and the size and complexity of targeted data.

Outcome: New data will lead to derived geothermal gradients, heat flow, thermal conductivity, and radioactive heat production numbers in areas where such data are inadequate or lacking.

Attachment 4

Science Advisory Board

State Geological Survey Contributions to the National Geothermal Data System Project

A DOE-funded project of the Association of American State Geologists, managed by the Arizona Geological Survey

The Science Advisory Board (SAB) will review the data types, quantities, and priorities proposed by each subcontractor in their annual Statement of Work (SOW), and make recommendations to the Project Management on accepting or revising the SOW. This review is a prerequisite for finalization of subcontracts and granting of spending authority. At the end of each SOW time period, the SAB will review the decisions, progress, and success of the subcontractors in meeting goals and schedules laid out in their SOW, and this review will be a consideration in recommendations on subsequent SOWs.

Dr. Rick Allis, Director of the Utah Geological Survey, with strong expertise in geothermal energy, will chair the SAB. Other members will be appointed by the Executive Committee of AASG based on nominations from the State Geologists.

Duties

Review subcontractor Statements of work (SOW). The SOW specifies the deliverable data sets and documents that a subcontractor will prepare and submit as an information resource for the National Geothermal Data System. SAB reviewers are expected to evaluate:

1. The relevance and significance of the proposed deliverables for development of geothermal resources
2. The appropriateness and utility of the proposed delivery mechanism
3. Whether the quantity of delivered data is consistent with the funding level and reasonable estimation of the effort required to produce the proposed deliverable.

Recommend actions to the Project Management, which may include

1. Accept SOW as presented, or
2. Revise SOW target deliverables based on priorities, quantity of data, type of data, or other criteria.

Review subcontractor's prior year accomplishments with respect to their SOW and make recommendations for continued funding to the Project Management
Make recommendations to MAB on scientific priorities for the project
Advise project staff on improvements to the Statement of Work process

Time commitment

Appointment to the SAB is for one year, and may be renewed for the duration of the project (three years), with two face to face meetings each summer. The first year meetings will review the first year SOWs. In subsequent years, the meeting agenda will include evaluation of subcontractor performance for completed work programs, and review of new SOWs. We are working this out as we go, and the meeting schedule is subject to change!
The first meeting of the SAB will be in mid July 2010 for two days to review SOWs received at that point. A second meeting later in the summer, also likely to be two days, will be necessary to review SOWs for the remaining subcontracts. Each of these meetings will be to review 20-30

SOWs, and we anticipate a minimum of 8-10 hours of pre-meeting preparation to study the documents.
Phone conferences may be scheduled as necessary, but we do not anticipate regularly scheduled phone calls.

Qualifications and considerations for membership
Must be current DOE NGDS awardee or subcontractor to DOE awardee
Must have technical expertise or knowledge in one or more areas of geothermal energy, such as:

- High-temperature (hydrothermal)
- Low-temperature (direct use, ground loop systems, binary systems)
- Geopressured reservoirs
- Enhanced Geothermal Systems

Some experience with data management is important to evaluate appropriateness of deliverable data quantity and delivery mechanism.
Experience with reviewing work plans and proposals would be helpful.
We wish to encourage diverse geographic representation on the SAB.
Nominations should include a current CV or resume for the candidate.

Support
The project PIs and Project Manager will provide technical and administrative support to the SAB, including availability during the panel reviews to answer questions and offer explanations about any aspects of the project requirements.

Compensation
AZGS has budgeted project funds to cover the travel for all members of the SAB to carry out their duties. Additional funds will be added to the budgets of those project participants who have a member of SAB, to pay for their time to serve on the SAB, including reviewing SOWs and participating in the meetings.

ATTACHMENT 5

ROLE OF HUBS IN AASG CONTRIBUTIONS TO NGDS PROJECT

Draft planning document

1/3/2011 12:43 PM

From Project Statement of Project objectives

Task 4. Establish regional technical resource centers

Purpose: *To provide training, guidance, and assistance to Surveys in developing and implementing data quality and integrity guidelines, developing metadata, implementing data services, and configuring their servers to link seamlessly with the NGDS.*

Approach: *The project will establish multiple regional technical resource centers with a programmer/developer in each one, to serve that region. These centers will utilize existing facilities at the host agency.*

Milestone: *Hiring of the regional programmers will occur during the beginning of Phase I.*

Outcome: *Technical resources will be working with participants to meet project goals and standards*

Task 10.0 Formulation of the data maintenance and sustainability strategy

Purpose: *Ensure availability, reliability, and update of data and services in the NGDS during and beyond the project.*

Approach: *Educate system data providers and users through workshops at the regional technical resource centers. Data provided by state geological surveys can be hosted by the originating survey, at one of the regional centers, or by the NGDS core, and depending on policies developed by NGDS may be mirrored by other NGDS system servers. Regional centers will mirror and backup data for their region, and provide redundant service instances to prevent a single point of failure. Develop a business model to sustain system maintenance for data and services by engaging stakeholders who have financial resources available and an interest in continuing system operation.*

Milestones: *Create a network of NGDS servers with the regional centers, and determine what resources each center will mirror and backup. Implement mirroring and backup during Phase 3. Sustainability plan must be in place*

Outcome: *Data and services are backed up and a system is in place for continuity beyond the duration of the project.*

Subtask 10.1 Implementation of regional aggregation services and back-up of data

Purpose: *To ensure data backup, continuity of service, and the potential for a permanent repository*

Approach: *Each regional center will host a data server that provides multiple functions: mirrored services for state servers in that region to ensure data backup, continuity of service, and the potential for a permanent repository.*

Milestone: Multiple regional backup and mirroring systems will be set up and configured.
Outcome: Data are backed up and aggregated for enhanced functionality.

Functions at hubs:

A dedicated programmer/developer in each hub will assist Project Partners in their region with service implementation and deployment.

Mirror services for states in region

- ensure data backup
- service availability
- data archive
- host services for partners that do not want to or cannot host their own services.

Host workshops for education on service implementation

Discussion

Each hub will need to have a public server online that can implement and expose NGDS services, including WFS, WMS, and CSW. The implementation used is not critical. If various implementations are in use, we will gain experience with different approaches. Use of the same implementation in more than one location will allow reuse of components and experience between hubs. Possible server-side implementation software that we currently are aware of includes [commercial]: ESRI ArcGIS Server (WMS, WFS), ESRI GeoPortal Toolkit (for CSW), [Free, Open Source--FOSS]: Geonetwork (for CSW), Deegree (WFS, WMS), Minnesota Map server (WFS, WMS), GI CAT (CSW), and GeoServer (WMS, WFS). There are other implementation options as well, both commercial and FOSS. The FOSS packages are all Java-servlet based applications that we have run with Tomcat, under Windows and Linux.

We will need to develop expertise in extract-transform-loading (ETL) data to map between different schema—from spreadsheets or other weakly structured data to databases and to and from xml into other formats. To successfully deploy services, some understanding of xml schema and xslt transformations is essential, and it is within scope of the project to use project time developing this expertise.

Each state in the project is associated with one of the hubs as a first point of contact for technical help issues. The initial proposed grouping is geographically based (with adjustments for responsibilities for various states). It may turn out to make more sense to repartition these groups based on the kinds of data states are working on and the service implementation/deployment paths they choose. The grouping is a matter of convenience, and the intention is to make sure that the work load for system development and debugging is evenly divided.

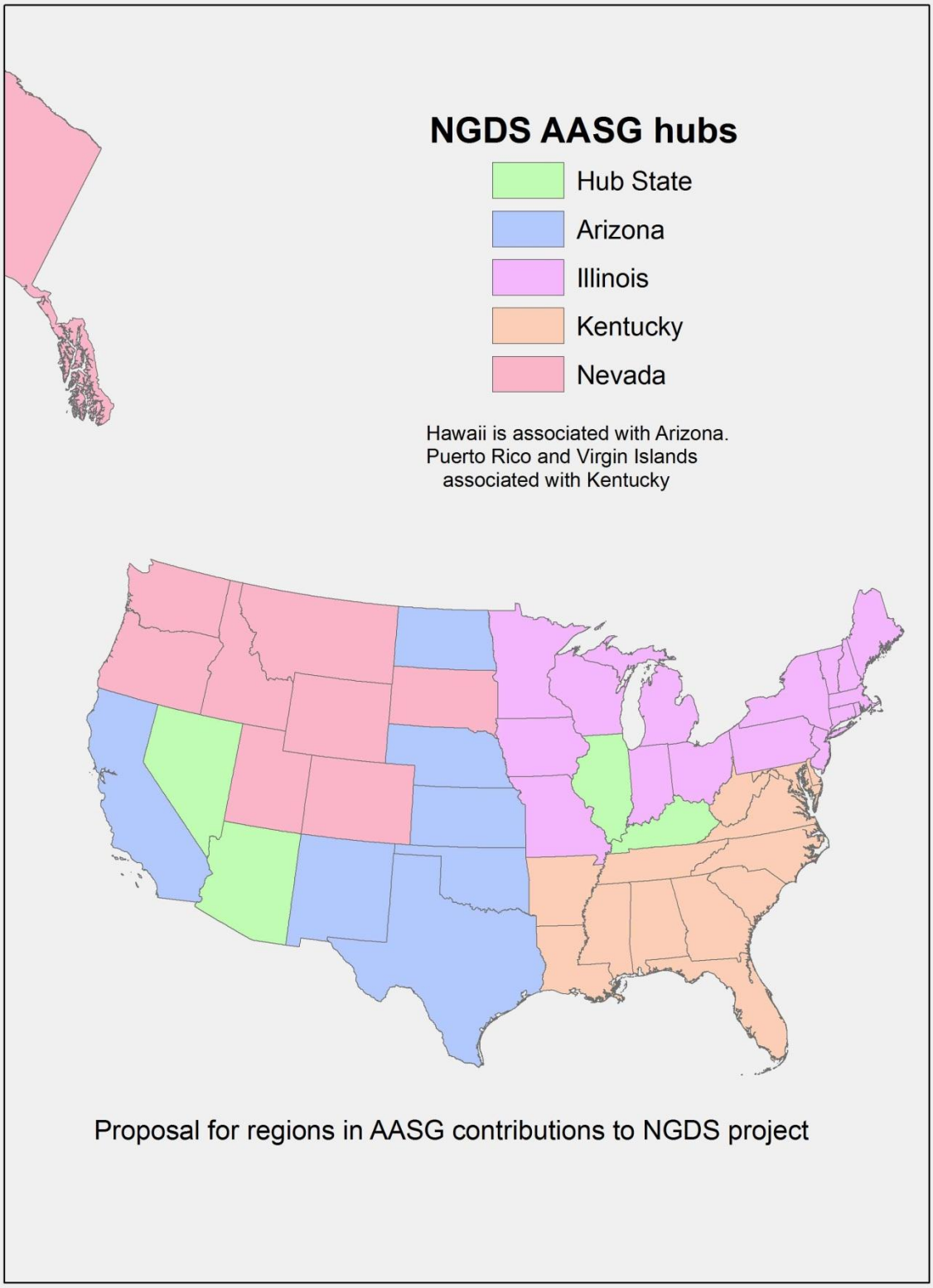
NGDS AASG hubs
Hub State
Arizona
Illinois
Kentucky
Nevada
Hawaii is associated with Arizona.
Puerto Rico and Virgin Islands
associated with Kentucky
Proposal for regions in AASG contributions to NGDS project

Attachment 6

System Architecture in Geoscience information system

Scientific information systems are evolving from data- centric architectures toward service-oriented architectures (SOA) and systems. Data-centric architectures consider interactions and interoperability at the data level, sharing common physical data models, while service-oriented architectures promote interoperability among information systems through shared functional interfaces and conceptual models for information. Today's generation of information users expect to discover and access geosciences resources using Internet technologies (Nativi and Fox, 2010).

This document discusses implementation of service oriented architecture. There are various approaches to service implementations—Enterprise Service Bus, Enterprise Application Integration are commonly treated as end members, but share many aspects of implementation. Issues are role of mediator services as connectors between clients and servers. Directly client server connection requires modification of one or both applications if the service profile changes. Use of a mediator component between client and server provides a mechanism to implement new profiles by providing an adapter service in the mediator for applications that do not use the new profile.

The World Wide Web operates as a networked information system that imposes several constraints: Agents identify objects in the system, called resources, with Uniform Resource Identifiers (URIs). Agents represent, describe, and communicate resource state via representations of the resource in a variety of widely-understood data formats (e.g. XML, HTML, CSS, JPEG, PNG). Agents exchange representations via protocols that use URIs to identify and directly or indirectly address the agents and resources. (http://www.w3.org/TR/2003/WD-webarch-20031209/)
A more constrained architectural style for reliable Web applications known as Representation State Transfer (REST) (Fielding, 2000, http://www.ics.uci.edu/~fielding/pubs/dissertation/top.htm) is the subset of the WWW (based on HTTP) in which agents provide uniform interface semantics -- essentially create, retrieve, update and delete -- rather than arbitrary or application-specific interfaces, and manipulate resources only by the exchange of representations. REST interactions are "stateless" in the sense that the meaning of a message does not depend on the state of the conversation.

Within this framework two major classes of Web services can be defined:

- REST-compliant Web services, in which the primary purpose of the service is to manipulate XML representations of Web resources using a uniform set of "stateless" operations;
- arbitrary Web services, in which the service may expose an arbitrary set of operations.

Both classes of Web services use URIs to identify resources and use Web protocols (such as HTTP and SOAP 1.2) and XML data formats for messaging. SOAP 1.2 protocols can be used in a manner consistent with REST, but can also be used in a manner that is not consistent with REST. (http://www.w3.org/TR/ws-arch/)

Web service:
The W3C defines a "web service" as "a software system designed to support interoperable machine-to-machine interaction over a network. It has an interface described in a machine-processable format (specifically Web Services Description Language WSDL). Other systems interact with the web service in a manner prescribed by its description using SOAP messages, typically conveyed using HTTP with an XML serialization in conjunction with other web-related standards."(http://www.w3.org/TR/ws-gloss/)
The W3C also states, "We can identify two major classes of web services, REST-compliant Web services, in which the primary purpose of the service is to manipulate XML representations of Web resources using a uniform set of "stateless" operations; and arbitrary Web services, in which the service may expose an arbitrary set of operations."[5] (http://www.w3.org/TR/ws-arch/; http://en.wikipedia.org/wiki/Web_services)

ESB represents the piece of software that lies between the business applications and enables communication among them. Ideally, the ESB should be able to replace all direct contact with the applications on the bus, so that all communication takes place via the ESB. In order to achieve this objective, the ESB must encapsulate the functionality offered by its component applications in a meaningful way. This typically occurs through the use of an enterprise message model. The message model defines a standard set of messages that the ESB will both transmit and receive. When the ESB receives a message, it routes the message to the appropriate application. Often, because that application evolved without the same message-model, the ESB will have to transform the message into a format that the application can interpret.

Table 1. Functional capabilities

Category	**Functions**
Invocation	support for synchronous and asynchronous transport protocols, service mapping (locating and binding)
Routing	addressability, static/deterministic routing, content-based routing, rules-based routing, policy-based routing
Mediation	adapters, protocol transformation, service mapping
Messaging	message-processing, message transformation and message enhancement
Process choreography	implementation of complex business processes
Service orchestration	coordination of multiple implementation services exposed as a single, aggregate service
Complex event processing	event-interpretation, correlation, pattern-matching
Other quality of service	security (encryption and signing), reliable delivery, transaction management; queuing, holding messages if applications temporarily become unavailable
Management	monitoring, audit, logging, metering, admin console, Business activity monitoring (BAM)

(http://en.wikipedia.org/wiki/Enterprise_service_bus)

An enterprise messaging system (EMS) is a set of published Enterprise-wide standards that allows organizations to send semantically precise messages between computer systems. EMS systems promote loosely coupled architectures that allow changes in the formats of messages to have minimum impact on message subscribers. EMS systems are facilitated by the use of XML messaging, SOAP and Web services.
(http://en.wikipedia.org/wiki/Enterprise_messaging_system)

ESB can be thought of as a middleware manifestation of SOA design applied to integration. It tries to build standards-based integration network using SOA, messaging, and XML.

Characteristics of ESB
Objective is integration of data and processing across a distributed system.

- Pervasiveness. Core of a pervasive grid (???). Service container is a core concept
- Distributed data transformation. Convert data formats between applications; transformation services can be located anywhere. Impedance matcher between applications.
- Extensible through layered services. ?service chaining?
- Event driven architecture. Collection of service endpoints that respond to asynchronous events. Protocols wrap service implementation. Messages are received as events.
- ESB routes messages to service endpoints. Routing can take message content into account.
- Has process flow capability; appear to implement workflows using bus. (like ArcGIS geo-processing graphs…)
- Implements transactions, security, authentication
- Xml is native data type

From Chappell, D.A., 2004, Enterprise Service Bus: O'Reilly.
(http://books.google.com/books?id=Uhue3faV2mwC&printsec=frontcover&dq=0596006756&source=bl&ots=OUqsUnR-g8&sig=T2H_aiIyRkGhg-hd8vZRE_NJn-Y&hl=en&ei=kmzTS9bbD5P0sgOmrMXqCQ&sa=X&oi=book_result&ct=result&resnum=4&ved=0CBgQ6AEwAw#v=onepage&q&f=false)

An SOA is more a network of services talking each other, without having to use an intermediate component (as the concept of a "bus" implies) to do so

The only central component in such architecture is a service registry/directory, i.e. a UDDI server. But it does not take part in every communication, but is needed in order for peers to find each other before talking. The idea of a "bus" to allow services to interoperate collides both with such free architecture, and moreover totally clashes with the idea of an UDDI server.

Nonetheless, functions typically performed by ESB products may be needed; only I see them just as additional, optional modules being part of a SOA, but not needing the central, mandatory hub of it. These functions are: 1) Allowing for asynchronous communications (temporal decoupling) 2) Allow for publish/subscribe messaging (functional decoupling) 3) Perform transformation of messages 4) Perform routing of messages
1) and 2) are needed in the vast majorities of SOAs, but not in every messaging interchange inside it.
3) and 4) are also usually needed, but again only in selected interactions. But there is no reason why they have to be implemented by a single, specialized component; any service in the SOA

can perform them as needed, using whatever technology is deemed proper to implement it. Plus, UDDI gives the flexibility to dynamically register such services so that peers start using them, instead of having them contacting always the "bus". E.g. if service A wants expects interface I from service B, but service B does not offer it, then service B' must be created (by whatever means) which acts as an adaptor, offering I to A. B' is registered in the UDDI, A finds it and invokes it - that's all, without needing to change A, or of any central bus.
It is a mistake to concentrate all the transformation and routing logic in a single component, because it ends up being yet another repository of business logic, with its own means of being developed and administered, besides the own services

Interconnecting with ESB is based on adapters that make changing the legacy system unnecessary. But unless there is some messaging standardization, if you have 10 disparate systems, you would need up to 10*9/2 = 45 adapters. Getting different groups from different backgrounds together to collaborate can cause problems and be a headache.

Versioning of messages between systems, if not planned for, can cause tight coupling instead of the intended loose coupling. Requires meticulous work to configure dependencies and remove them when no longer needed. Have to learn to configure ESB, but after this learning curve, can change configuration to make parts interact or interact differently with each other, without coding. Problem is that as the system grows large, no one knows the entire system and how all the parts interact. Don’t expect configuration to be as easy as a simple parameter change.

ESB or mediator introduces an extra translation layer which might cause information loss. New projects should focus on reusing the existing canonical data model.
Applications that already work must be integrated into the system with minimum cost and disruption.
From: http://en.wikipedia.org/wiki/Talk:Enterprise_service_bus

References

Nativi, Stefano, and Fox, Peter, 2010, Advocating for the Use of Informatics in the Earth and Space Sciences: EOS, v91, n8, p75-76

Attachment 7

AASG Feature Definition

DisplayName	Implementation	TextDescription
Active fault	Feature class	Geologic feature representing an active fault. Default geometry is line representing outcrop trace on ground surface, in WGS 84 decimal degrees. Binding between earthquakes and faults is from earthquake hypocenter observation feature to fault.
Well log	1-D coverage	A coverage that reports some physical observation at regularly spaced intervals along a borehole trace. Use for well logs, probably a web coverage service. Discrete coverage is collection of depth/value/ units tuples.
Borehole	Feature class	Feature that represents a well or borehole. Point location is well origin or borehole collar, includes attributes for surface elevation of collar, PLSS and geographic coordinate locations of collar. Use GeoSciML borehole model as starting point.
Borehole temperature measurement	Observation class	Feature class for borehole that has associated temperature data. Part of thermal well description. Use for measurements that may or may not be at the bottom of a borehole. Use in situations where there are only one or a few measurements in a borehole.
Crustal strain rate	Observation class	One of a family of observation services. In short run these may be specific to data type, but in long run a more generic observation service may be better if generic clients are developed that connect to an OGC/ISO observation service
Dike, vein, or marker bed	Feature class	Line mapped feature that has an associated geologic unit description.
Document object	Metadata record	Product is metadata for document accessible online
Drill stem test	Observation class	Associated with borehole, has top, bottom coordinates of interval, geologic formation, pressure, flow data, Operartor…
Earthquake epicenter	Observation class	Epicenter is location determined based on complex analysis of seismic waveforms, thus each epicenter is the result of an observation. Observation service would return individual determination or collection of determinations.
Flooded mine feature	Feature class	Features representing water-filled mine workings, either subsurface or surface. Coal mines in Indiana. Of interest as a water source. Delineate as polygons

Fluid chemistry	Observation class	An observation that characterizes the fluid composition of a sample or fluid unit. (a fluid unit is analogous to a geologic unit--fluid associated with some particular part of the earth, typically an aquifer or surface water body). Need to study EarthChem and CUAHSI to determine best approaches to dealing with variety of analyses. Need to distinguish simple observation which is analysis of one sample, from composite observation that may integrate results from multiple samples to characterize spatial or temporal variation.
Geothermometer observation	Observation class	Temperature estimation based on geochemical analysis of fluid constituents. May need different scheme for each system to make flat file, or if can consistently define method, analyze, concentration, uncertainty, anal procedure, calculated tmax, tavg…
Contact, fault, fold	Feature class	A line mapped feature that has an associated geologic structure description; use for faults of any age, fold hing surface traces, traces of joints…
Lithology log interval	Feature class	Segments of a linear sampling feature (borehole, measured section) with geologic unit description for each interval. Use borehole as root element, sampling frame provides geometry, mapped intervals are intervals along trace with 3-D geometry (borehole col
Map unit polygon	Feature class	Mapped feature, with geologic unit description, part of a Geologic Map. Use GeoSciML portrayal scheme. Recommend using NGMDB Lite syntax for Lithology, geologicHistory, and otherProperties.
Geothermal facility	Feature class	Facilities with geothermal heating/cooling installation, power generation, or other geothermal application installed. Production record is {startDate, endDate, commodity, quantity, units}
Geothermal system	Feature class	Feature representing a geothermal system. Has polygon representing projection of system to earth surface, production data, associated operators, some sort of classification for geothermal category, development status, peak temperature, estimated heat available.
Geologic unit	Feature class	Feature representing a summarizes properties for geologic unit; focus on properties of interest for Geothermal energy
Heat flow measurement	Observation class	basic data and result for heat flow measurement
Hot spring	Feature class	Point feature representing a hot spring, a kind of Water source feature
Metadata	Metadata record	Information describing some resource, its provenance, quality, and how to access the resource
Physical property (soft typed)	Observation class	Generic observation for single result observation of a physical property, e.g. thermal conductivity

Co-produced fluid feature	Feature class	A borehole collar feature for a well other than a specifically thermal water well, with flow rate and temperature data. May want to have only one borehole water source feature? With produced fluid composition property? Need some kind of parameter for wate
Whole rock radiogenic element analysis	Observation class	Analytical data for U, Th, and K associated with a rock sample; may include calculated radiogenic heat production. Probably should consider an SOS offering type for a trace element chemistry service.
Resource suitability	Feature class	Features that carry attributes specifying suitability of an area for some resource development base on some criteria. Methodology should be includes as procedure on each feature, along with source of analysis (who, when, why, where done).
Sample	Feature class	Feature class for representing samples. Each has a sampled feature, curation location, Sample Location.
Area coverage	2-D raster coverage	an X,Y grid with associated data value for each point. What kind of data specified might vary. Have to explore WCS for these.
Soil classification polygons	Feature class	SSURGO dept. of agriculture soil map unit
Structure data point	Observation class	An observation located at a point that reports the orientation of a geologic structure.
Thermal well	Feature class	Feature that describes a well producing water that is warmer than ambient.
Trace element chemistry	Observation class	Observation reporting trace element chemical characterization of some target feature of interest, which may be a sample, an aquifer, a geologic unit…
Volcanic vent area	Feature class	Polygon feature representing the area from which volcanic rocks have been erupted.
Map layer	WMS layer	Data product to be presented as a layer in a web-accessible map service like ESRI map service or OGC WMS. This is a generic category for map types that do not fit in any of the more specific categories.
Chemical analysis	Observation class	Major element chemical analysis. Could do as analyze result collection, or record collection with first record is 'header' with analyzes, and standard observation properties, subsequent members have vector of results.

Attachment 8

Procedure and guideline for distribution of supplemental funding

The AASG Geothermal Data project will distribute supplemental funds totaling $3.6 million to existing project participants based on a competitive review of proposals. Proposals are due to the Arizona Geological Survey by 11:59 pm MST (PDT), Friday, October 1, 2010.

Proposals must address meeting the goals of Task 2.4 in the projects Statement of Project Objectives:

Subtask 2.4 Collection of new data

Purpose: Make new measurements, calculations, and interpretations, and collect samples.
Approach: Each state will assess the extent, usefulness, and nature of data to determine what gaps are most critical to fill.
Milestone: Data will be collected incrementally and continually. Specific product delivery schedules will be based on SAB established priorities and the size and complexity of targeted data.
Outcome: New data will lead to derived geothermal gradients, heat flow, thermal conductivity, and radioactive heat production numbers in areas where such data are inadequate or lacking.

The purpose of this supplemental funding opportunity is to fund collection of new field data that will have maximum immediate utility for the discovery and utilization of geothermal energy resources. Geothermal systems of all types are of interest to the program, but bear in mind that DOE seeks to develop and validate hundreds of megawatts to gigawatts of power in keeping with the U.S. Department of Energy strategic objective to double renewable energy generating capacity to 60GW by 2012. . Broadly, the types of systems may be categorized as

- proven hydrothermal systems (that are currently producing power or being developed for power production)
- near-field hydrothermal systems (close to proven systems),
- undiscovered hydrothermal systems ("blue sky" exploration),
- or enhanced geothermal systems (EGS),
- geopressured and co-produced fluid systems (associated with oil and gas fields generally)
- low-medium temperature systems, including sedimentary basins (generally targeting binary fluid power production)
- Ground source heating/cooling systems [low priority]

Based on the recommendations of the project Management Advisory Board, we plan on allocating project supplemental funds in two categories: drilling projects and field data acquisition projects.

Because of the cost of drilling geothermal test holes and the benefits of reducing cost per hole by scaling a project to include more holes, we anticipate that states may form consortia with multi-hole drilling programs to collect data in one or more states in a region. We anticipate that up to about $2 million will be available to support the costs of geothermal test hole drilling and/or associated logging costs. The maximum allowable award for a single project is $1 million. Proposals from consortia of state participants for multiple holes in multiple locations are eligible for funding. The rest of available funds will be allocated for lower cost, new data acquisition projects expected to be funded at the $10,000 to $50,000 level with possibly a few up to the $200,000 range each. Participants will not be funded for more than one lower-cost project. However, participants may submit a separate, lower-cost proposal in the event a larger-scale project in which they are participating is not funded. Therefore, support costs for participants staff involved in the large-scale drilling projects should be proposed separately in these lower-cost proposals.

Proposals can request funds for the incremental costs of acquiring new data or samples from projects carried out by other parties. This would include, for example, running temperature logs or gathering heat flow data from a ground water well or petroleum well. Proposals can include acquisition of non-geologic data by demonstrating the critical contributions such data would provide towards resource exploration and development.

We expect this is a one-time solicitation for Supplemental Funds for this project. Duration of projects can range from 1 to 3 years. The length of the project and completion dates must be stated explicitly in the proposal. All data generated in the project must be included in the provider's contributions to the NGDS. The amount and types of data to be produced should be documented using the template used in the primary SOW. Costs of making the data available to the NGDS in the same manner as the primary SOW should be included in the budget proposal.

Proposals will be evaluated by the Science Advisory Board, and their funding recommendations will be tailored to maximize the quality and utility of data acquired through this program. The board may choose to allocate a different proportion of the total funds to drilling projects if in their judgment such an allocation would better achieve the objectives of the project.

Proposals should be limited to 4 pages of text plus figures, SOW template, and letters of commitment. Budgets must be submitted using SF424 forms. Brevity, clarity, and compelling justification are of the essence. There is no cap on the funding level requests but participants must be realistic about amount of funds available and likely number of recipients. States may submit a new data acquisition request in addition to proposing a drilling operation or participating in a larger drilling consortium; however only one project per participant will be allocated. Total funding to any particular state participant will be evaluated on a cost-benefit basis relative to other funded projects.

Proposals will be evaluated on the following criteria:

- Direct utility of the new data acquired for geothermal resource exploration, evaluation, and development (35%)

- Targeting of key areas for data acquisition that will have maximum impact on our understanding of geothermal systems towards their exploration and development (20%)
- Financial advantage based on leveraging of funding and participation by other projects or agencies (15%)
- Demonstration of project viability and likelihood of achieving results within the specified time period. This is especially important for drilling-type projects that may require NEPA compliance or permitting with land management agencies (30%)

Projects selected for funding will have Supplemental Statements of Work added to their existing contracts from AZGS for the Geothermal Data project, with the consequent budget increase. This will not otherwise change the existing SOWs or contracts.

Attachment 9

DOE NGDS II Minimum Metadata Reporting Concepts

Wolfgang Grunberg (AZGS); Ryan Clark (AZGS), Jordan Hasting (UNR), Steve Richard (AZGS)

Metadata - data about data - is used to describe, discover and access digital or physical resources. The DOE-NGDS II minimum metadata reporting requirements are designed to balance the need for on-line, interoperable metadata discovery and distribution with the cost of generating digital metadata. In order to effectively advertise your resources, metadata records must accomplish three major goals:

1. **Describe** the digital or physical resource or service.
2. **Credit** the owner, author, originator, or responsible party of the resource.
3. **Provide access** information to the described resource.

We are not proscribing any particular metadata format, but strongly recommend ISO19139 XML or FGDC CSDGM XML. Please confer with the AZGS developer team about metadata formatting to facilitate import of metadata into the NGDS catalog.

Metadata Fields

Key: *Groupings*; **required**, **conditional**, and **optional** metadata fields; (**number of values that can be specified**).

- *Citation*
  - **Title** (**1 entry**): Succinct (preferably <250 characters) name of the resource.
  - **Description** (**1 entry**): Inform the reader about the resource's content as well as its context.
  - **Originators** (**1 to many entries**): Authors, editors, or corporate authors/curators of the resource.
  - **Publication Date** (**1 entry**): Publication, origination, or update date (not temporal extent) for the resource. Use a "year" or ISO 8601 date and time format. Alternative date formatting must be machine readable and consistent across all datasets.
  - **Keywords** (**0 to many entries**): Thematic, spatial and temporal free-form subject descriptors for the resource. A keyword may be assigned on metadata import if none are present.
  - **Resource language** (**0 to 1 entries**): Use three letter ISO 639-2 language code (defaults to "eng" for English).
  - **Resource ID** (**0 to many entries**): Resource identifier(s) following any public or institutional standard. Identified consists of an identifier string and if applicable a **Resource ID Protocol** identifier string that specifies the protocol for the resource ID standard. For example: undefined, ISBN-10, ISBN-13, ISSN, URN, URI, IRI, DOI, HTTP, SSN, etc. Many protocols build the identifier for the protocol into the identifier string.
  - *Intellectual Originator Contact* (**0-1 entry**): The primary party responsible for creating the resource. **Organization name**, **person name**, **street address**, **city**, **state**, **ZIP code**, **email**, **phone**, **fax, URL**.

- **Bibliographic Citation** (0 to 1 entries): Full bibliographic citation if the resource has been published.

- *Geographic Extent - Horizontal* (1 entry, point or minimum bounding rectangle): **north bounding latitude, south bounding or point latitude, east bounding longitude, west bounding or point longitude.** Values given in decimal degrees using the WGS 84 datum. A minimum bounding rectangle will be created if point coordinates are given. Some resources may not be usefully described by an extent; if no extent is specified the default is Earth. This convention would have to be modified for systems describing extraterrestrial resources.
- *Geographic Extent – Vertical* (0 to 1 entries*): **datum elevation**, **datum type**, **maximum elevation, minimum elevation**. Values given in meters. Maximum and minimum elevations are relative to the reported datum elevation, which will typically be the Earth surface at the location of the resource or sea level. Datum elevation must be reported relative to mean sea level. Datum type must be a controlled vocabulary (Earth surface, MSL, Kelly bushing, etc.). The maximum is always numerically greater than the minimum elevation. For boreholes with datum at the earth surface, depth below surface is reported as a negative number. *Vertical extent may be reported relative to different datums (e.g. sea level, Earth surface) in the same record.
- *Temporal Extent* – Temporal range over which the resource was collected or is valid. If the resource pertains to specific Geologic time periods, those terms should be entered as keywords.
    - **Start date** (0 to 1 entries): Use ISO 8601 date and time format.
    - **End date** (0 to 1 entries; required if start date exists): Use ISO 8601 date and time format.
- *Resource*
    - *Link to the resource* (0 to 1 entries): A URL pointing to a resource or resource webpage. **URL**, **function**, **format**. Function term from controlled vocabulary specifying what an HTTP get using the URL will invoke. Format is a controlled vocabulary term specifying the format (MIME media type) of a file-based response if applicable. The function might be return an html page, and electronic document in some other format, an end point for a service, an online application that requires user interaction, etc.
    - **Access instructions** (0 to 1 entries): A sentence or paragraph describing how to access the information.
    - *Distribution Contact* (1 entry): The party to contact about accessing the resource. **Organization name**, **person name, street address**, **city**, **state**, **ZIP code**, **email**, **phone**, **fax, URL**. In general, a contact for distribution should be required for physical resources.
    - **Quality statement** (0 to 1 entries): describe the quality of the resource.
    - **Constraints statement** (0 to 1 entries): describe the resource's legal and usage constraints.
    - **Lineage statement** (0 to 1 entries): describe the resource's provenance.
- *Metadata*
    - **Metadata Date** (1 entry): Last metadata update/creation date-time stamp in ISO 8601 date and time format. This may be automatically updated on metadata import if a metadata format conversion is necessary.
    - **Metadata UUID** (0-1 entries): A Universally Unique Identifier (UUID) will be assigned during the metadata import process if one is not provided. Unique identification of each metadata

record is required to avoid duplicate entries across multiple metadata catalogs. The UUID format provides unique identification without centralized coordination.

- *Metadata Contact* (1 entry): The party to contact with questions about the metadata itself. **Organization name**, **person name, street address**, **city**, **state**, **ZIP code**, **email**, **phone**, **fax, URL**.
- **Metadata Specification** (1 entry): Identifier string that specifies the metadata specification used to create a metadata record encoding this content. Should indicate the base standard and version, as well as any profile that applies to the content or encoding. Ideally the identifier could be dereferenced to obtain information about the applicable specification.

Attachment 10

Instructions for AASG-NGDS Statement of Work

AZGS Project Management Team

1/3/2011 12:43 PM

Introduction

The goal of the AASG National Geothermal Data System (NGDS) project is to make information that is useful for geothermal exploration, resource evaluation, and development easily accessible online. Information from different data providers must be presented in a consistent, documented format to users of NGDS. NGDS users must be able to locate information anywhere in the system through a single search. Information resources must be accessible online. To meet these requirements, data produced or provided for inclusion in the National Geothermal Data System (NGDS) must be accompanied by metadata describing datasets and how to access them. To enable interoperability, data sets will need to be published using an interchange format adopted by the community and documented for system use. For comparison, *html* is the interchange format used by the WWW that allows any web browser to find any online object, including documents, images, databases, multimedia files, etc.

This effort hinges on development of a community of practice using a shared collection of protocols for publishing, finding, and delivering digital information online. One of the foundations for this community is a shared vocabulary for discussing the architecture of the system, the protocols used for communication, and the nature of the information resources themselves. Some of this vocabulary is introduced in this document. Like any community vocabulary, it is dynamic and expected to evolve as our community grows. Definitions included in the glossary are intended to help readers understand the terms as they are used here.

The Statement of Work

The AZGS has the task of assuring that data compiled by the project subcontractors are integrated into the National Geothermal Data System. The goal is to expose data in one or more interchange formats for which software applications (particularly the geothermal desktop application in development at Boise State University under a parallel DOE project) are available that can read and utilize date in the interchange format directly. Compatibility with the interchange format does not dictate the logical and physical data models used for internal data management by the producing agency. What is necessary is that the information content in the internal data model can be mapped in a systematic way to the interchange format. To enable integration, partners need to confer with the AZGS team to determine the most effective mechanism for data integration.

For contractual, evaluation, and reporting purposes, specific metrics are required in the Statement of Work (SOW) that will be developed with each project participant. In the accompanying spreadsheet, this is represented by the 'No. items to be entered' column for resources that are to be scanned or digitized, and for data that are already in a digital form, quantification by number of records or bytes in the 'Amount of digital data exposed to the NGDS' column.

The Statement of Work worksheet also requests information on the data delivery plan, and a statement of the significance of the proposed data to the NGDS. These factors will be considered by the project's Science Advisory Board (SAB) in evaluating the scope of work. The SAB will make recommendations to the Project Management on the appropriateness, quality, and quantity of work proposed by each participant, on an annual basis. The recommendations and decisions DO NOT affect the budget for each

participant, but will determine whether the annual work plan is approved and thus whether the participant will be authorized to undertake their work on the project.

Data development cycle

We are planning that each group compiling state data will be operating on an approximately one year data development cycle. Because of the number of the number of partners who will be submitting data, we need to stagger data delivery so that the end of each cycle is not an impossible-to-handle data deluge. Figure 1 displays the data development cycle. After submission, review, and acceptance of the Statement of Work for the cycle, each participant will prepare a small test data set to prototype the data delivery content and format for each deliverable product. The NGDS development team at AZGS, in collaboration with the NGDS core development team at Boise State and our developers at our regional training and server hubs, will review this prototype and test integration of the data with the NGDS system. Debug iterations will be made between the NGDS system and each data producer until the prototype is demonstrated to work and provide the necessary content. At this point the project management team will

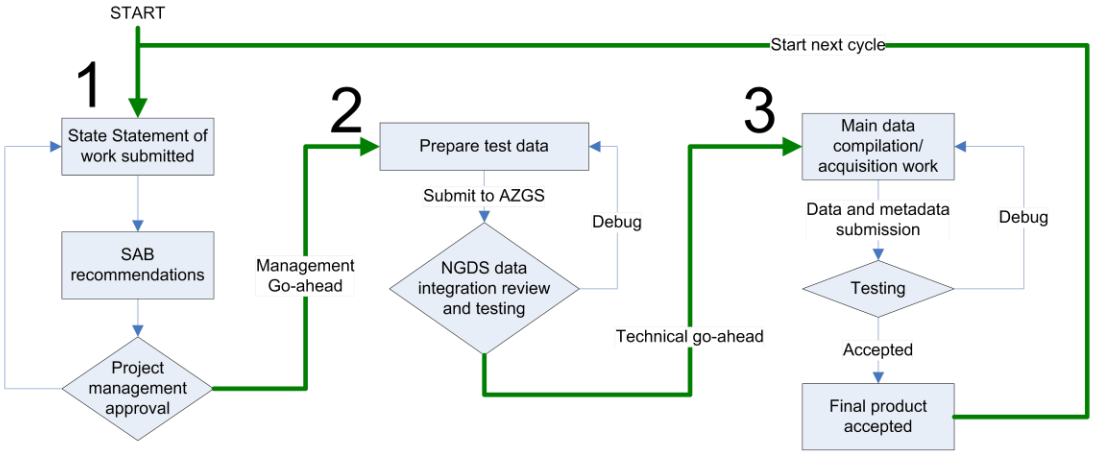

Figure 1. Data development cycle

give the data provider a go-ahead for development of the full data product for that cycle. The prototype dataset should at that point be made 'live' (accessible online) in the system, but flagged as a development data set. It is strongly recommended that as data are developed, they are incrementally added to the prototype delivery dataset so that content is available as early as possible, and problems with scaling will become apparent if they emerge. When the data producer has completed the data development, they will make a final data submission for technical review and approval. Ideally the final submission will simply be a declaration that the live dataset evolved from the prototype is complete and ready for final review. Upon approval by the project management, the data producer may submit their SOW for the next data development cycle.

Data types and priorities

It is extremely important to show tangible applications of the data system as soon as possible. To this end, we urge that subcontractors confer with geothermal energy community in their state to determine which data holdings would be immediately useful for geothermal resource exploration and development. In some cases this may be financial or production data that is not purely geologic in character. There is wide interest in any geothermal gradient data measured in boreholes that are not already incorporated into the heat flow database compiled by David Blackwell at Southern Methodist University (http://smu.edu/geothermal/heatflow/heatflow.htm). If you are proposing compilation and publication of

heat flow or thermal gradient data to the NGDS, please check to determine if it has already been compiled in that database. If it has, please explain what enhancements you plan on making to the existing data. Other geoscientific data of special interest are rock thermal conductivity information, and aqueous geochemical analyses of thermal waters that may be useful for geothermometry to estimate temperatures in deeper geothermal aquifers.

Data to be scanned

Reports, logs, maps and other documents pertinent to geothermal energy exploration, evaluation, development, and production that exist in hard copy but are not available online may be converted to digital form by scanning to create digital image files. If the resource is a map, it should be georeferenced (geoTiff or world file) if possible. Preferred document formats are pdf, tif, jpg, or png. File formats that are specific to particular software are undesirable and their use will need to be justified and approved by the project management. OCR processing of text to make Adobe Acrobat files searchable is highly desirable. Georeferenced map images ideally will be published through a web map service (WMS) as well as accessed from document repositories. Deliverable digital documents must be publicly available online, and registered in the NGDS metadata catalog. A prototype document repository, implemented using Drupal software is available for deployment by data providers that do not currently have such an online repository (http://repository.usgin.org/). This application also supports production of metadata meeting NGDS requirements. Instructions for deployment are available at http://lab.usgin.org/groups/drupal-development/creating-document-repository-drupal.

Digital data

Because one of the principal project objectives is data interoperability to facilitate data integration from various sources, data in tabular file formats (spread sheet, stand-alone database like Microsoft Access, etc) will be expected to use a data schema that is compatible with data interchange formats in use by NGDS. These formats may need to be developed by the AZGS development team in collaboration with each participant as part of the iterative test/debug prototyping cycle in the data development process (Step 2 in Figure 1, above).

Data to be digitized

Geospatial and measured data are most useful in a computer analyzable format. Paper manuscript maps should be scanned and georeferenced to start. Maps that represent discrete map units or linear features (like a geologic map) can be converted to a vector GIS digital format if they are deemed to have sufficient value by the data provider. Tabular data associated with sites or samples (e.g. chemical analyses, gravity data) may need to be manually converted from text to tabular digital data.

Existing digital data

Data that are in a structured digital format can be published for viewing using web map service (WMS), delivered as file-based GIS datasets (using a document repository, see above), or published as a web feature service (WFS). The choice will depend on the nature of the dataset and the capabilities and priorities of the data provider. In order to make information interoperable, the system will develop conventions for data interchange formats that may require conversion of internal data formats and vocabularies to an interchange format. This will be the time-consuming part of publishing existing datasets. For resources that are digitized under the auspices of this project, crafting of the digital conversion process can make generation of the interchange formats easier. In some cases, the interchange formats will need to be developed based on the information that project partners wish to publish to the system.

Service availability

Data delivered by publishing as an online service must be guaranteed to be available 24/7 at least for the duration of the project (3 years). Part of the NGDS project is development and implementation of a business model for long-term maintenance of system resources.

Technical discussion

Data delivery options

Participants have two options on how to make their data available:

- Register files in an NGDS-compliant document repository; submit metadata to NGDS-compliant catalog.
- Implement a web service, either at your agency, a NGDS data center (Boise State, regional project hubs at state geological surveys--Kentucky, Illinois, or Nevada), or by arrangement with another agency. Submit metadata to NGDS-compliant catalog.

Data will be considered part of the NGDS when it is locatable using the NGDS core catalog, and accessible via the web according to procedures described in the metadata record obtained from the NGDS core catalog. The anticipated delivery process must be defined in the Statement of Work (Data delivery plan column in spreadsheet) and approved by the project management team before the main data compilation phase of a data development cycle (step 3 in Figure 1, above).

Metadata

Metadata should be created and submitted for any resource that is meant to be accessible individually via the web.

Individual documents require one metadata record per document. Some document types may consist of a bundle of files, e.g. ESRI shape file. In general these should be bundled into a single file like a zip archive or UNIX tar file. The metadata must include the URL at which the document can be accessed. These documents might be scans of well logs, scanned reports or publications, or data in a spreadsheet, such as an Excel file.

Datasets include internal record level source information, documenting details of observation or measurement procedure and other information specific to a particular data type. This includes information such as location, data and time of observations, and the source of the data. These metadata are delivered with the data, and only summarized in the dataset metadata that are published to the NGDS-compliant catalog.

The required metadata content is explained in Appendix 1 'Minimum metadata content requirements'. These requirements proscribe the content of the metadata, but not the delivery format. FGDC xml or ISO19139 xml are strongly recommended because software tools exist for producing and editing metadata in these formats. Please confer with the AZGS developer team about metadata formatting to facilitate import of metadata into the NGDS catalog.

Datasets:

The accompanying Excel spread sheet NGDS-II SOW workbook includes a DataItems tab that contains a summary of the data items proposed for delivery by NGDS project partners in the survey submitted during proposal preparation. This list is dynamic; as the project evolves new data items will be added as necessary.

The term ‘Data item’ used here to denote a kind of information that has a well-defined scope, which may be defined by the physical property specified, or by the kind of information artifact involved. The purpose of this classification is to analyze the information of interest into types that will use the same data schema, delivery mechanisms, and metadata schema.

A number of the data items the list will require additional modeling to determine a useful collection of attributes to specify delivery of interoperable data. Our plan is to confer with partners proposing to deliver those data items and experts on these topics, to develop a model that includes the necessary and available information. In order to make data specifying physical properties interoperable, we will be developing requirements for content of data records, and the units of measurement used for reporting. In general, data products will be expected to include measured data in the units of original record as well as the NGDS reporting units.

The category column in the spreadsheet DataItems tab groups data items into higher-level information categories that correspond to the 4 main categories of services in the system architecture. These are:

- Observation – an information resource representing the event of observing or measuring and recording properties of some feature (Open Geospatial Consortium, Observations and Measurements (O&M), http://www.opengeospatial.org/standards/om). Observations represent the basic data that are the foundation for the other information categories. The content model includes: a result, which is the measured or observed value; a feature of interest, which is the feature the observer wishes to characterize; a procedure, which includes information on who made the observation and how it was made. A sampling feature may be specified to record what part of the feature of interest was the actual target of the observation. The observation model allows modeling composite observations, which may represent the aggregation and interpretation of one or more input observations. At least initially we will be using a flattened, simplified version of the full O&M schema that can be served using OGC simple features.
- Feature – an information resource representing some identifiable thing of interest in the world. A feature is described by a collection of attributes that are typically each the result of one or more observations. Features present a more aggregated or interpretive view of the world than observations (although a feature can be modeled as the result of an observation). Features will be delivered via OGC Web Feature Services (Open Geospatial Consortium, Web Feature Service, http://www.opengeospatial.org/standards/wfs) or other similar services. Typically, features have a geographic location.
- Document -- A packaged body of intellectual work; has an author, title, some status with respect to review/authority/quality. ‘USGS peer reviewed’ would be a 'status property'. We will have to account for gray literature, unpublished documents, etc. A document may have a variety of physical manifestations (pdf file, hard-bound book, tiff scan, Word processor document...), and versions may exist as the document is traced through some publication process. They may be map, vector graphics, or text. Sound, moving images are included as document types.
- Coverage – A dataset that reports the values of some continuously varying property over some spatial or temporal extent. Examples include well logs that report the values of resistivity, density, or some other property along the well bore, gravity maps that report measured (perhaps by extrapolation) values of gravity over some geographic region. A coverage may be the result of one or more observations. A coverage may also be associated with an individual feature, such as a map showing the thickness distribution of a geologic unit or the average temperature at some depth in a geothermal system.

The discussion of data items in the Statement of Work spreadsheet, DataItems tab assumes familiarity with the basic Open Geosptial consortium (OGC) service architecture. GeologicUnit and GeologicStructure are used as defined for the GeoSciML xml markup language

(http://www.geosciml.org/geosciml/2.0/doc/), and system implementers are strongly encouraged to become familiar with that specification as well.

In general, measured quantities should be reported in the units of the original measurement, as well as in units that will be requested for data integration. We propose that the original data provider is most likely to provide accurate unit conversions, as opposed to leaving unit conversions to the data consumer or service provider.

Glossary:

Aquifer: A geologic unit that is a hydrologically connected body of material and contains water.

Artifact: A thing created by humans, usually for some practical purpose (http://www.merriam-webster.com/dictionary/artifact)

Attribute: a binding between a property, a data type, and a data item; an implementation of a property.

Cardinality: a constraint on the number of instances of assigned property values associated with an individual data item. A cardinality of 1 indicates exactly one value is required; 0..1 indicates an optional single value; 1..n indicates that one or more values is required; 0..n indicates that a value is optional, and multiple values may be specified.

Content model: A model that identifies and defines the data items and the properties (with cardinality) associated with each data item.

Data item: an identifiable unit of information. Generally represents some entity in the world.

Data type: a specification of the representation of a single value in an information system, using integer, floating point, string, Boolean.

Feature: an information resource representing some identifiable thing of interest in the world.

Feature type: Type for representing a feature

Geologic structure: A configuration of matter in the Earth based on describable inhomogeneity, pattern, or fracture in an Earth material. The identity of a GeologicStructure is independent of the material that is the substrate for the structure. GeologicStructures are more likely to be found in, and are more persistent in, consolidated materials than in unconsolidated materials. Properties like "clast-supported", "matrix-supported", and "graded bed" that do not involve orientation are considered kinds of GeologicStructure because they depend on the configuration of parts of a rock body. (from http://www.geosciml.org/geosciml/2.0/doc/GeoSciML/GeologicStructure/GeologicStructure.html)

Geologic unit: a body of material in the Earth whose complete and precise extent is inferred to exist (NADM GeologicUnit, Stratigraphic unit in sense of NACSN or International Stratigraphic Code), or a classifier used to characterize parts of the Earth (e.g. lithologic map unit like 'granitic rock' or 'alluvial deposit', surficial units like 'till' or 'old alluvium'). (from http://www.geosciml.org/geosciml/2.0/doc/GeoSciML/GeologicUnit/GeologicUnit.html)

Geothermal system: A body of material in the Earth from which energy may be extracted as heat in a fluid circulated through the body and transported to an external point of use. A geothermal system does not have to be exploited or exploitable. (provisional definition)

Information resource: A resource that can be transmitted electronically.

Property: A phenomenon that is inherent in the nature of some other phenomenon, and may be used to characterize it by specifying a value.

Protocol: a set of rules which is used by computers to communicate with each other across a network (http://en.wikipedia.org/wiki/Network_protocol)

Representation: A binding between a symbol (in language, text, graphics, computer bits, etc.) and a human concept or resource.

Resource: An identifiable thing that fulfills a requirement. Usage here is close to definition used in RDF (www.w3.org/TR/REC-rdf-syntax), generalized from ISO19115, which defines resource as an 'asset or means that fulfills a requirement' without defining asset or means. "An object or artifact that is described by a record in the information model of a catalogue" (OGC 07-006r1)

Schema: A formally structured representation of a conceptualization. A model presented using some specific notation.

Specification: a document that describes the technical characteristics of an artifact, possibly including a description of *what* it should do, or an explicit set of requirements that it must satisfy (based on http://en.wikipedia.org/wiki/Specification).

Type: specification of a collection of attributes and cardinalities for those attributes used to represent a data item.

Recommended informatics reading:

GeoSciML documentation, Available at http://www.geosciml.org/geosciml/2.0/doc/. Project home page is http://www.cgi-iugs.org/tech_collaboration/geosciml.html.

International Organization for Standardization (ISO), Geographic Information—Metadata: ISO 19115. Official site is http://www.iso.org/iso/catalogue_detail.htm?csnumber=26020, but the document costs 224 Swiss Francs from there. Get it from http://webstore.ansi.org/RecordDetail.aspx?sku=INCITS%2fISO+19115-2003 for US$ 30.00.

Open Geospatial Consortium, Catalogue Service Implementation specification (CSW). Available at http://www.opengeospatial.org/standards/specifications/catalog. V2.0.2 is in use; See also the ISO Metadata Application profile, accessible from the same web page.

Open Geospatial Consortium, Observations and Measurements (O&M). Available at http://www.opengeospatial.org/standards/om. This has been adopted as ISO 19156.

Open Geospatial Consortium, Web Feature Service Implementation specification. Available at http://www.opengeospatial.org/standards/wfs. V. 1.0.0 and1.1.0 are in use; version 2 is expected soon with some significant improvements.

Open Geospatial Consortium, Web Map Server Implementation Specification (WMS). Available at http://www.opengeospatial.org/standards/wms. Versions 1.1.1 and 1.3.0 are in use.

USGIN ISO metadata guidelines, Available at http://lab.usgin.org/profiles/usgin-iso-19139-profile.

Recommended geothermal reading:

DOE geothermal website, including sections on Enhanced Systems, Hydrothermal systems, Direct Use, and heat pumps. http://www1.eere.energy.gov/geothermal/geothermal_basics.html

Enhanced Geothermal Systems:
http://www1.eere.energy.gov/geothermal/pdfs/evaluation_egs_tech_2008.pdf
http://www.google.org/egs/

Summary of existing heat flow data in the U.S.(hosted by Southern Methodist University (SMU)): http://smu.edu/geothermal/heatflow/heatflow.htm

Australian Geothermal Energy Group (AGEG) http://www.pir.sa.gov.au/geothermal/ageg

Geothermal Energy Association, Geothermal Basics: http://www.geo-energy.org/geo_basics.aspx

Blackwell, D.D, 1971, Thermal Structure of the Continental Crust, in The Structure and Physical Properties of the Earth's Crust, Geophys. Mono. Ser. 14, ed. J.G. Heacock, 169-184, AGU, Washington D.C., 1971.

Roy, R.F., Blackwell, D.D., and Decker, E.R., 1972, Continental Heat Flow, *in* The Nature of the Solid Earth, Ed. E.C. Robertson: McGraw-Hill, New York, pp. 506-543.

Williams, C.F., Marshall, J.R., and Mariner, R.H., 2008, A Review of methods applied by the U.S. Geological Survey in the Assessment of Identified Geothermal Resources: USGS OFR 2008-1296, 30 p. Accessed at http://pubs.usgs.gov/of/2008/1296/pdf/of2008-1296.pdf 2010-05-24.

Attachment 11

Participants in project

AK -Alaska Div. of Geological & Geophysical Surveys
AL -Geological Survey of Alabama
AR -Arkansas Geological Survey
AZ -AZ Geological Survey
CA -California –(performed by AZ)
CO -Colorado Geological Survey
CT -Connecticut -Performed by MA
DE -Delaware -Performed by VA
FL -Florida Geological Survey
GA -Georgia -performed by VA
HI -University of Hawaii
IA -Iowa DNR-Geological & Water Survey
ID -Idaho Geological Survey
IL -The Board of Trustees of the University of Illinois
IN -Trustees of Indiana University/Indiana Geological Survey
KS -University of Kansas Center for Research, Inc.
KY -University of Kentucky Research Foundation
LA -Board of Supervisors of Louisiana State University and A&M College
MA -Massachusetts Geological Survey & Connecticut Geological and Natural History Survey
MD -Maryland -performed by VA
ME -Maine Geological Survey
MI -Western Michigan University-Department of Geosciences
MN -Minnesota Geological Survey
MO -Missouri Geological Survey, Department of Natural Resources, Division of Geology and Land Survey
MS -Mississippi Department of Environmental Quality
MT -Montana Bureau of Mines & Geology
NC -North Carolina Geological Survey
ND -North Dakota Geological Survey
NE -Nebraska –(performed by North Dakota)
NH -New Hampshire Geological Survey
NJ -New Jersey Geological Survey
NM -New Mexico Institute of Mining & Technology
NV -Board of Regents, NSHE, obo University of Nevada, Reno
NY -New York State Geological Survey
OH -Ohio Dept. Natural Resources, Division of Geological Survey
OK -The Board of Regents of the University of Oklahoma
OR -Oregon Department of Geology and Mineral Industries
PA -Pennsylvania Geological Survey
PR -Puerto Rico TBD
RI -Rhode Island Geological Survey

SC -South Carolina Geological Survey
SD -Sinte Gleska University
SD -South Dakota Akeley-Lawrence Science Center, USD (In-kind Services only
TN -Tennessee Division of Geology
TX -Texas Bureau of Economic Geology
UT -Utah Geological Survey
VA -Virginia Division of Geology and Mineral Resources
VT - Vermont Office of Department of Environmental Conservation
WA - Washington State Dept. of Natural Resources
WI -Wisconsin Geological and Natural History Survey
WV -West Virginia Geological and Economic Survey
WY -Wyoming State Geological Survey